Webasto

Feel the Drive

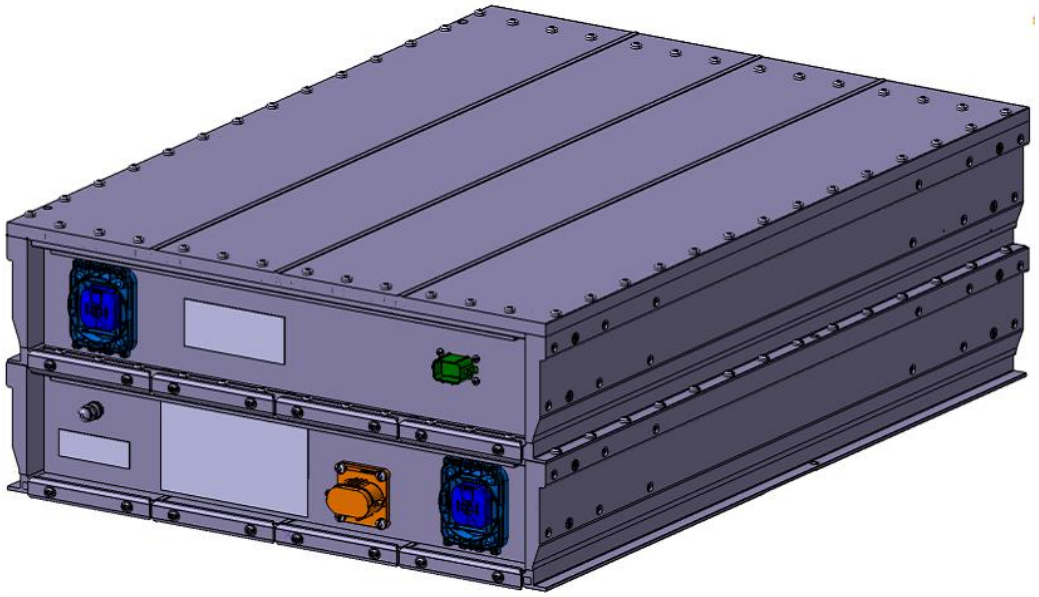

Quick Manual
Webasto CV Standard Battery

Specifications for Battery Pack and BMS for Commercial Vehicles

11.03.2020

Contact Information:

1. Jonas Keutmann – Testing Engineer

   Phone: +49 (89) 85794-55896
   Mobile Phone: +49 (172) 6580384
   E-Mail: Jonas.Keutmann@webasto.com

2. Daniel Schwerdtfeger – Lead Engineer

   Phone: +49 (89) 85794-56910
   Mobile Phone: +49 (152) 21746729
   E-Mail: daniel.schwerdtfeger@webasto.com

Change review

Version	Date	Changed by	Description of change
1	22.08.2019	M. Krompic	First release B2-Sample
2	02.09.2019	M. Krompic	Update: Min. flow rate, tolerance of the torques, Figure 11 inlet and outlet signals added
3	23.09.2019	D. Schwerdtfeger	Restriction of the acceptible installation space in the vehicle
4	14.10.2019	M. Krompic	Cross sections in LV Connector-table adapted
5	23.10.2019	M.Krompic, D. Schwerdtfeger	Review changes
6	14.01.2020	M.Merkel	Review +
7	24.01.2020	Barthel/Heizer	Added chapter: Service and Decomissioning CV battery pack
8	28.01.2020	M.Merkel	Colored Warnings acc. to ISO 3864 Review changes
V12	07.02.2020	M.Merkel	7 & 8 Warning labels 3.3 Pack Handling without Brackets 5.2.2 Pinning Table 2 5.2.5 Addressing of one or more CV Standard Batteries
V13	13.02.2020	M.Merkel	Coverpicture 6.5 Pre-charge capacity up to 1,5mF 5.2.3 Warning label water protection 4.2.8 Y-piece recommended 3.3. 3.3 Lifting and Handling of the CV Standard Battery 5.2.5 Addressing Warning labels 4.2 Warning lable 4.4. More Informations regarding arxml.-files
V14	14.02.2020	M.Merkel	6.7. Warning label
V15	25.02.2020	M.Merkel	6.3 Shut-Down Sequence: Avoidance of an cyclically woke up of the BMC 6.1.3 Initialization process of the BMC 5.2.1 The BMC uses high-speed CAN communication 5.2.1 .dbc DELETED 5.2.2 & 5.2.3 Warning label: UV-Protection New chapter: 2.2 Protection against Ultraviolet Light New chapter: 3.1.1 Ingress protection of the venting device

V16	09.03.2020	M.Merkel	6.2 Start-Up Criteria of Battery System: Text below the Info-Label 5.2.1 CAN Communication of the CV Standard Battery 5.2.2 Battery Side LV Connector: Table 2 edited: Pin 20, 21 HVIL 0 ; Pin 23 Wake Up 2 (Not used) 5.2.5 Addressing of the CV Standard Battery: Figure 21: Example for a BMS Pack Name inserted with a reference in the text over the figure Table 6: An example of the addressing pinning for the cable harness between a battery pack and VIB inserted with a reference in the text over the table 6.7 Interlock: New Info-Label about interlock PWM signal 5.2.4 Further Information Regarding LV-Power Supply Specification: Table 3 renamed
V17	11.03.2020	M.Merkel	New chapter 3.1.1 Vibrations Load Chapter “Ingress protection(IP) of the venting device” is now chapter 3.1.2 New warning label (Danger) in chapter 3.2.2

Abbreviations

BMC	Battery Management Controller
BMS	Battery Management System
CAN	Controller Area Network
CV	Commercial Vehicle
DC	Direct Current
DoD	Depth of Discharge
EMC	Electromagnetic Compatibility
HV	High Voltage
HVIL	High Voltage Interlock
LV	Low Voltage
NMC	Nickel Manganese Cobalt
PCC	Pre-Charge Contactor
PE	Potential Equalization
S-BOX	Switch-Box
SoC	State of Charge
SoH	State of Health
UV	Ultraviolet
VIB	Vehicle Interface Box
VIC	Vehicle Interface Controller

Contents

1 Introduction 11
2 General Information about the CV Standard Battery 12
2.1 CV Standard Battery Characteristics 12
2.2 Protection against Ultraviolet Light 13
3 Mechanical Information 14
3.1 Mechanical Interfaces 14
3.1.1 Vibration Loads 15
3.1.2 Ingress protection (IP) of the venting device 15
3.2 Mechanical Handling and Usage 16
3.2.1 Fixing Points for Brackets 16
3.2.2 Vehicle Integration and EMC 18
3.2.3 Torsion of the CV Standard Battery 19
3.3 Lifting and Handling of the CV Standard Battery 19
3.3.1 Allowed Pack Orientation 23
3.3.2 Allowed Mounting Angle 24
3.3.3 Mounting distance between two CV Standard Batteries 25
4 Thermal Specifications 26
4.1 General Temperature Specifications of the CV Standard Battery 26
4.2 Cooling System 26
4.2.1 Overview of Cooling System 26
4.2.2 Cooling System Performances 27
4.2.3 Cooling System Pressure Limits 27
4.2.4 Filling of Cooling System 27
4.2.5 Coolant 28
4.2.6 Coolant Temperature 28
4.2.7 Thermal Insulation 29
4.2.8 General Overview of Connectors 29
4.2.9 Drawing of Connector 30
4.3 Cooling System Integration 30
4.4 Temperature CAN Signals 31
5 Electrical Interfaces 32
5.1 Overview of the Positions of the HV- and LV-Connectors 32
5.2 Low Voltage Interfaces 32
5.2.1 CAN Communication of the CV Standard Battery 32
5.2.2 Battery Side LV Connector 33
5.2.3 Vehicle Side LV Connector 37

5.2.4 Further Information Regarding LV-Power Supply Specification 38
5.2.5 Addressing of the CV Standard Battery 39
5.3 Service Disconnect Concept 42
5.4 Recommended Emergency Stop Architecture 42
5.5 High Voltage Interfaces 43
5.5.1 Battery Side HV Connector 43
5.5.2 Vehicle Side HV Connector 44
5.6 Potential Equalization (PE) 46
6 Function Descriptions 47
6.1 Communication between the CV Standard Battery and Vehicle 47
6.1.1 Arxml-Files for Description of the Vehicle-CAN-Signals 47
6.1.2 End-to-End Protection (E2E) 47
6.1.3 Initalization of BMC 48
6.1.4 BMS Commands 48
6.1.5 BMS Operational Modes 48
6.1.6 Required Vehicle-CAN-Signal Inputs 49
6.2 Start-Up Criteria of Battery System 52
6.3 Shut-Down Sequence 52
6.4 Contactor Control 52
6.5 Pre-Charge 53
6.5.1 Pre-Charge End Condition 53
6.5.2 Pre-Charge Energy Monitoring 54
6.6 Error Signals of BMS 54
6.7 Interlock 55
6.8 Insulation Measurement 56
6.9 Charging 57
6.10 Thermal Management 58
6.10.1 General Thermal Management Information 58
6.10.2 Communication with Thermal Management System 58
6.10.3 BatThermReq1 58
6.10.4 BatThermReq2 59
6.11 State of Charge (SoC) 59
6.12 State of Health (SoH) 59
6.13 Voltage Limits 59
6.13.1 Cut off Voltages for the Battery Cells 60
6.13.2 Cut off Voltages for the Battery Pack 60
6.14 Current Limits 60

6.15 Diagnostics....60
7 Rescue Service Instructions....61
7.1 General warnings....61
7.2 General information....62
7.2.1 Identification of HV components: 62
7.2.2 Emergency scenarios 62
7.3 Vehicle Immobilization 63
7.4 Deactivation of drive and high voltage system....63
8 Service and Decommissioning CV Standard Battery 64
8.1 General warnings for service and decommissioning 64
8.2 Service instructions and service plan....64
8.3 Decommissioning of battery pack 64

DANGER

The CV Standard Battery supplies high voltage up to 405 V (DC).
The installation and usage of the device is strictly limited to electrically skilled persons for high voltage (DC). Any unintended usage (e.g. short circuit, mechanical damage, forced opening of the covers, touching of unprotected live parts, etc.) can result in severe personal injuries or death.

WARNING

A single Pack or parallel System of the CV Standard Battery can withstand 405 V (DC) maximum without damages. Therefore, the CV Standard Battery must not be used in systems where voltages exceeding 405 V (DC) may occur!

The multi Pack System, with 2 Packs in serial, can withstand 810 V (DC) maximum without damages. Therefore, the CV Standard Battery must not be used in systems where voltages exceeding 810 V (DC) may occur!

The maximum operating pack voltage is 405 V. The minimum operating pack voltage is 288 V.

For continuous charge and discharge of the battery, the monitoring equipment of the test bench must ensure that the current limits are respected. Continuous violation of those limits might damage the battery cells and the electromechanical components of the battery.

The operating temperature range is from -30 °C to +60 °C at the cell cores (the maximum operating temperature at the bus bars inside of the modules is 55 °C). The recommended storage temperature is +15 °C to +20 °C.

To avoid undefined conditions, first install the potential equalization (PE) cable properly before connecting the LV connector and HV connector. To avoid damages of the BMS (battery management system) the supply voltage must not exceed 16 V. The operating supply voltage is 10 – 16 V DC. The recommended voltage range is 12 – 14 V DC.

The open ends of the HV cables must be properly connected to the test bench and secured against direct and indirect contact before connecting the HV-plug to the battery system.

During handling, the CV Standard Battery with disconnected connectors must be protected from humidity. The IP classification (IP67/IP6K9K) is only valid with properly plugged connectors.

The CV Standard Battery must not be stored permanently under direct sunlight (UV, ultraviolet light).

The two venting devices (located next to the LV and HV connectors) must be protected from damages and exposure to chemicals during handling and installation process. Furthermore, the venting devices must not be covered by any object.

The usage of the cooling system must be clarified and approved by Webasto.

Before operating the CV Standard Battery, the cooling system must be properly filled and vented.

1 Introduction

The CV Standard Battery Quick Manual gives an overview of the characteristics and functions of the battery pack and battery management system (BMS) developed by Webasto for use in commercial vehicles (CV).

In chapter 2, general information and characteristics of the CV Standard Battery are summarized.

Chapter 3 contains all mechanical information, including vehicle integration and secure handling of the CV Standard Battery.

Chapter 4 contains general thermal specifications and recommendations for cooling system of the CV Standard Battery. Filling steps of the specified coolant are also part of this chapter.

Low voltage (LV) and high voltage (HV) interfaces of the CV Standard Battery are described in chapter 5. Information about potential equalization (PE) is also part of this chapter.

Chapter 6 contains a function descriptions of the battery management system (BMS).

In chapter 7, rescue service instructions and emergency scenarios are described.

Service instructions and information about decommissioning of the CV Standard Battery are described in chapter 8.

In this Quick Manual, following warning labels and colors are used for a hazard classification according to ISO 3864:

Indicates a hazard with a high level of risk which, if not avoided, will result in death or serious injury.

Indicates a hazard with a medium level of risk which, if not avoided, could result in death or serious injury.

Indicates a hazard with a low level of risk which, if not avoided, could result in minor or moderate injury.

2 General Information about the CV Standard Battery

The CV Standard Battery provides high voltage DC power to the vehicle. It can operate alone and deliver power to the vehicle as a single battery pack, or it can be connected in parallel and/or series with other CV Standard Battery packs via a Vehicle Interface Box (VIB).

The CV Standard Battery can deliver 35 kWh, and consists of 192 Samsung SDI cells arranged in 16 modules: 6s2p (6 cells in series, 2 cells in parallel).

In case of a HV short circuit the fuse in the battery pack will be tripped.

2.1 CV Standard Battery Characteristics

Table 1: Summary of Characteristics for the CV Standard Battery

Weight (kg)	285
Dimensions (mm)	960 x 686 x 308,9
Software version	See attachment “Parameter Software”
Pack Energy Capacity (kWh)	~35
Pack Voltage Range (V)	288-405
Pack Gravimetric Energy Density (Wh / kg) (excluding transportation brackets)	~123
Pack Volumetric Energy Density (Wh / l) (excluding transportation brackets)	~203
Cell manufacturer	Samsung SDI
Cell Energy (Ah)	49,5
Cycle Lifetime @80% DoD, 25°C, 1C/1C	> 3000 cycles
Calendric Lifetime	8 years
Cell Type	Prismatic, NMC (N-rich)
Cell configuration in one module	6s2p
Number of cells in pack	192
Cooling Power (kW)	~1,3
Volumetric Flow in Cooling System (l/min)	10
Pressure Loss in Cooling System (mbar)	≤ 50

It´s not recommended to operate the CV Standard Battery permanently at SoC 100% due to aging of Lithium-ion cells

2.2 Protection against Ultraviolet Light

	All plastic parts outside of the housing of the CV Standard Battery shall be protected against UV light.

3 Mechanical Information

3.1 Mechanical Interfaces

The dimensions of the CV Standard Battery without brackets are 960 mm x 686 mm x 308.9 mm.

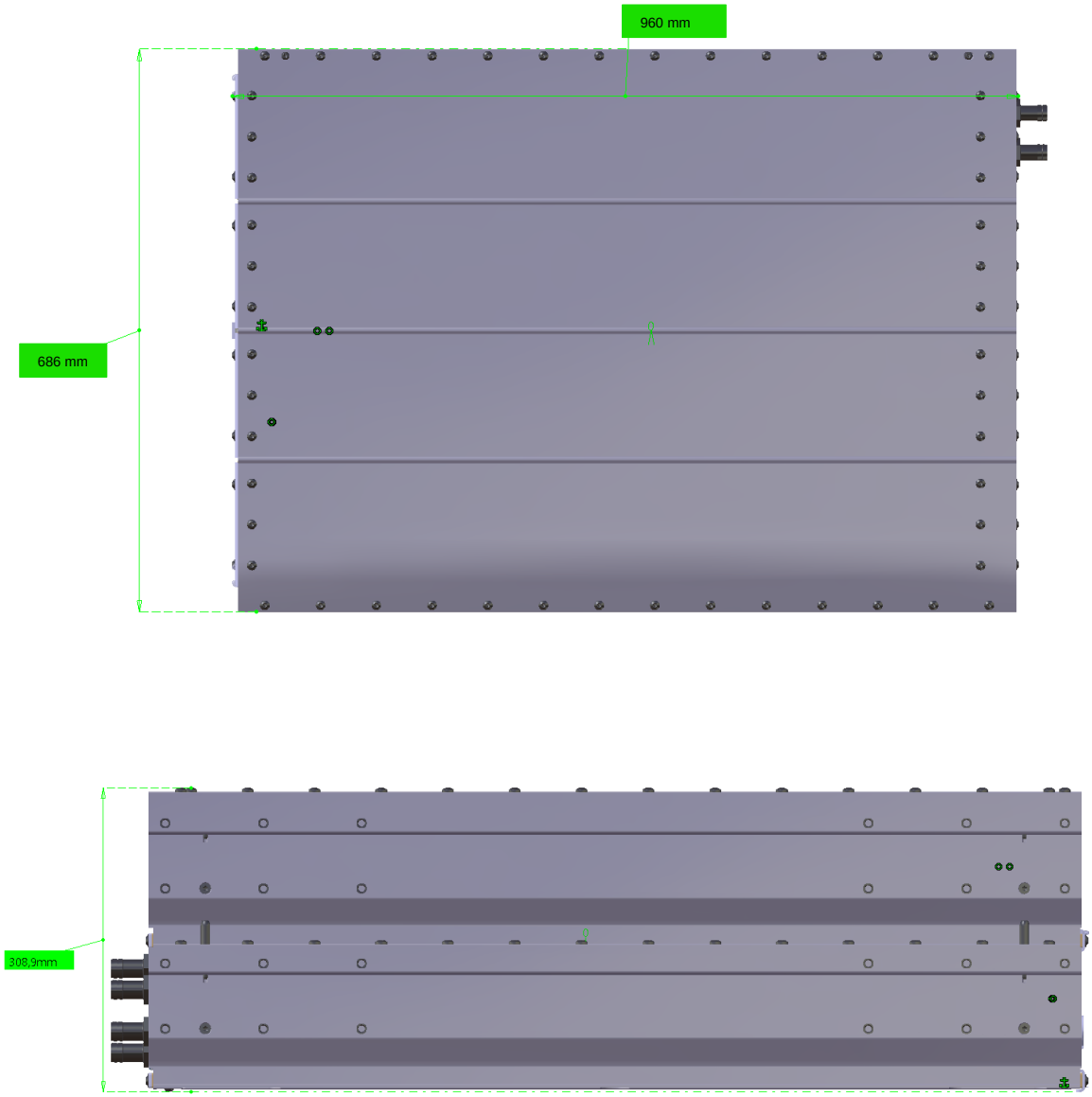

Figure 1: Dimensions of the CV Standard Battery

3.1.1 Vibration Loads

DANGER:

The CV Standard Battery is designed to withstand vibration loads as stated in ISO 12405-2:2012 Table 20 in every spatial direction. If the vibration loads of the intended application exceeds this loads, safety of the Battery cannot be guaranteed.

Table 2: PSD vibration profile of ISO 12405-2:2012

Frequency [Hz]	PSD [g^2/Hz]	PSD [$(m/s^2)^2$/Hz]
5	0.05	4,.81
10	0.06	5.77
20	0.06	5.77
200	0.0008	0.08
RMS	1,44 g	14.13 m/s^2

If vibration loads of the intended application exceeds the ISO 12405-2 vibration profile as shown in Table 2 above, Webasto highly recommends to use damping elements in order to reduce the loads applied on the CV Standard Battery

3.1.2 Ingress protection (IP) of the venting device

The installation position of the venting device within the vehicle shall fulfill IPxxD class.

3.2 Mechanical Handling and Usage

3.2.1 Fixing Points for Brackets

This chapter describes the mechanical interfaces between the CV Standard Battery and the VIB/vehicle.

The CV Standard Battery is delivered without mounting brackets and the brackets described in this manual is for handling and transportation purposes only. A delivery of a CV Standard Battery pack <u>with</u> brackets has to be specifically clarified with Webasto.

If brackets are used to fix the CV Standard Battery to the chassis/test bench, the following information should be taken into consideration:

For good and continuous electromagnetic compatibility of the vehicle, it is <u>strictly recommended</u> to provide a low electric contact (<1 mΩ) from the brackets to the vehicle chassis by the screws and to avoid any isolation layer between the brackets and the vehicle chassis.

To facilitate the handling of the CV Standard Battery, it is possible to attach four (4) brackets to the pack, one at each corner.

As shown in Figure 2, each corner of the pack housing is equipped with six fixing points (2x3 fixing points) on both the upper and lower layer (the CV Standard Battery consists of two layers with battery modules). In total, the CV Standard Battery is equipped with 48 fixing points.

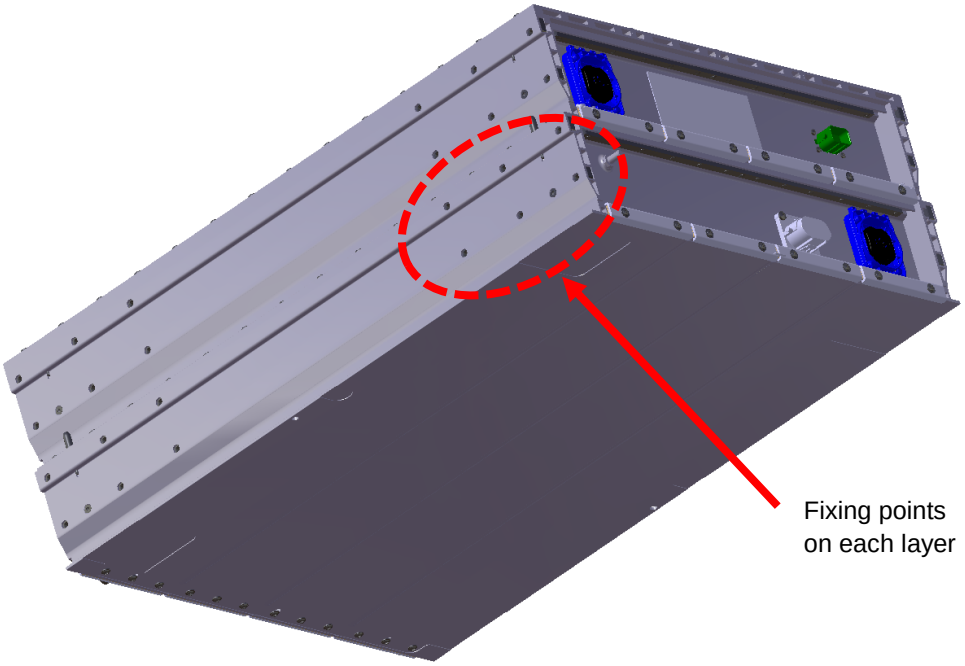

Figure 2: Each layer is equipped with six fixing points at each corner of the CV Standard Battery

The number of screws that are needed to attach the brackets to the CV Standard Battery depends on the application, but the general recommendation is to apply 48 x M8 screws. Figure 3 shows the recommended usage of the fixing points.

Only with the recommended screws of 48x M8 the ECE R100 is fulfilled.

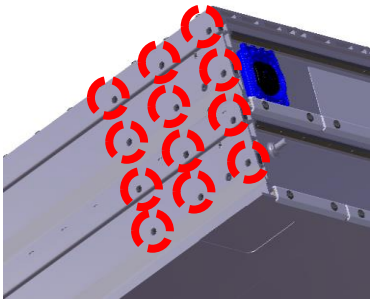

Figure 3: Recommended usage of fixing points

The following parts should be used to attach the transportation brackets to the CV Standard Battery:

- M8 (8.8) bolts
- Plain washers for M8 (8.8)

The applied torque is 20 Nm with the tolerance from ± 10%.

It is not permitted to screw deeper than 14 mm (with tolerance ±0.5 mm) into the fixing points of the CV Standard Battery, as this will damage the pack. The length of the applied screw depends on the thickness of the applied bracket and washers. If there is a gap between the bracket and the CV Standard Battery, also this length has to be added to the screw length.

The screw length can be calculated as follows:

$$\mathrm{Lenght}_{\mathrm{Screw}} = 14\mathrm{mm} + \mathrm{Thickness}_{\mathrm{Bracket}} + \mathrm{Thickness}_{\mathrm{Washer}} + \mathrm{Gap}_{\mathrm{CV-Bracket}}$$

	It is not permitted to screw deeper than 14 mm (with tolerance ±0.5 mm) into the fixing points of the CV Standard Battery.

3.2.2 Vehicle Integration and EMC

For good and continuous electromagnetic compatibility (EMC) of the vehicle, it is strictly recommended to provide a low electric contact (<1 mΩ), from the brackets to the vehicle chassis by the screws and to avoid any isolation layer between the brackets and the vehicle chassis (e.g. isolation painting).

According to ECE R100, the restriction on the permissible installation space in the vehicle must be implemented by the customer.

The CV Standard Battery packs must not be installed in the red area on the basis of the component approval (see Figure 4).

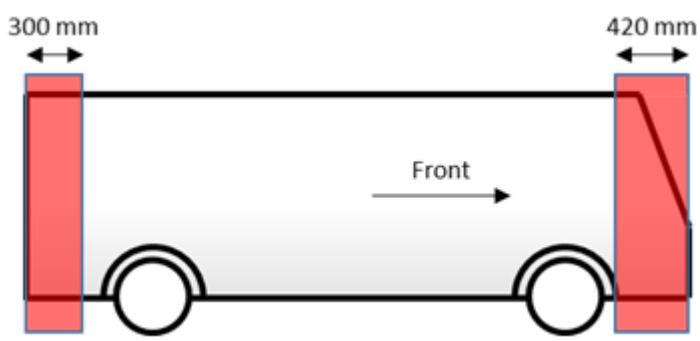

Figure 4: Not allowed installation area of CV Standard Battery on a vehicle

	Depending on the mounting position in the vehicle it may be necessary to protect the CV Standard Battery against intrusion of foreign objects on the road. The protection has to be designed and installed by the vehicle manufacturer.

	DANGER: **The CV Standard Battery is not designed to be mounted inside the passenger compartment.**

3.2.3 Torsion of the CV Standard Battery

The maximum torsion must not exceed a value of 0,035°, which corresponds to 7000 Nm. These values are valid for both, the transverse and longitudinal direction of the CV Standard Battery.

3.3 Lifting and Handling of the CV Standard Battery

	The following information is specific for the transportation brackets used by Webasto.

To enable secure handling, the CV Standard Battery is provided with four brackets with one hole each (see Figure 5). Each bracket has one (1) circular hole with diameter 30 mm (see Figure 6). The distance from the diameter edge to the bracket outline measures 23 mm. These dimensions enable the usage of transport hooks.

The CV Standard Battery shall only be handled by using the holes in the brackets. If any other transport methods are used, the product may get damaged or break.

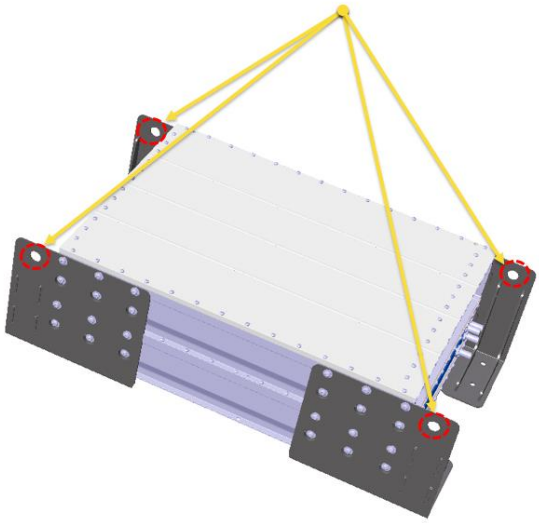

Figure 5: One hole per bracket for secure handling of the battery

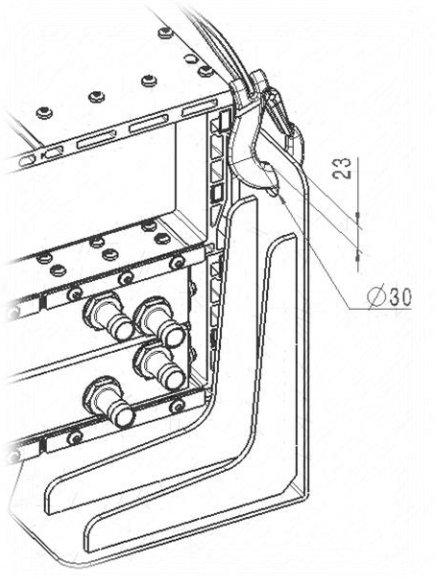

Figure 6: Dimensions of the handling hole

The following information is specific for generic delivery by Webasto.

To enable secure handling, the CV Standard Battery is provided with four holes as shown in Figure 7 (marked in red). The CV Standard Battery shall only be handled by using these four areas at the same

time. The dimensions are nominally 11.4 mm x 20.4 mm with radius 1 mm in all 4 corners of the lifting channel (see Figure 8).

If any other transport methods are used, the product may get damaged or break.

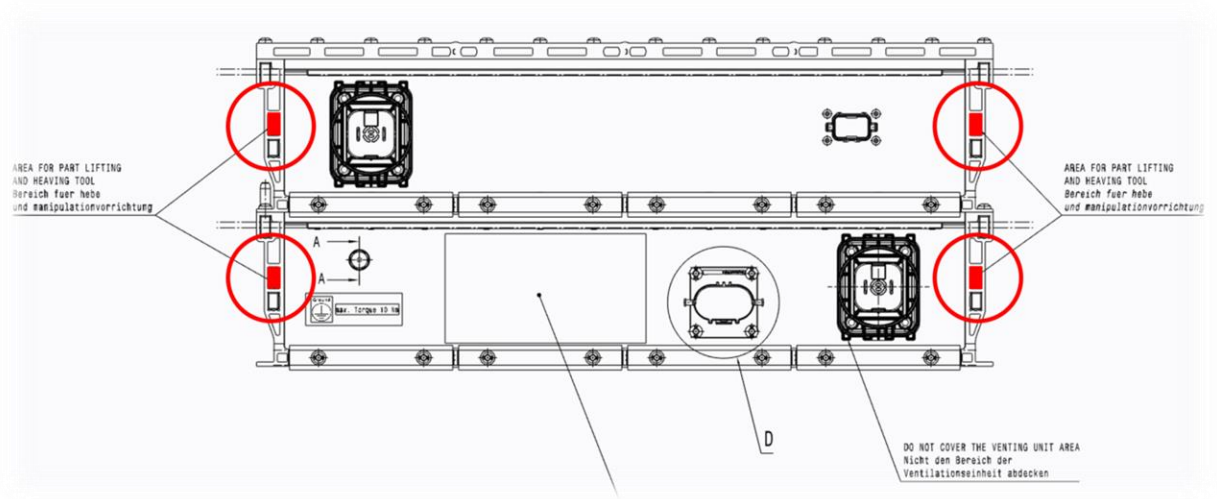

Figure 7: Area for part lifting and heaving tool

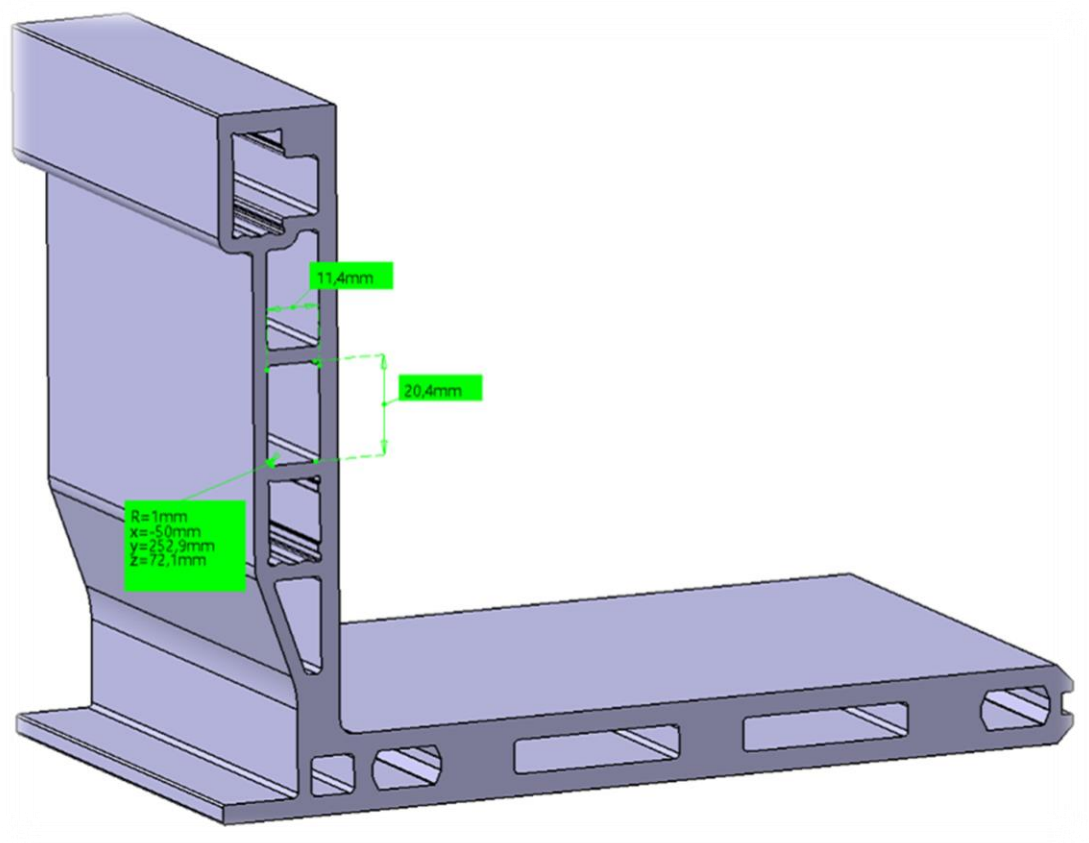

Figure 8: Dimensions of the area for part lifting and heaving tool

By using a EUR-pallet, the CV Standard Battery pack can be lifted by a forklift (see Figure 9). If the surface used to lift the pack is too small, the risk of tilting has to be taken into consideration.

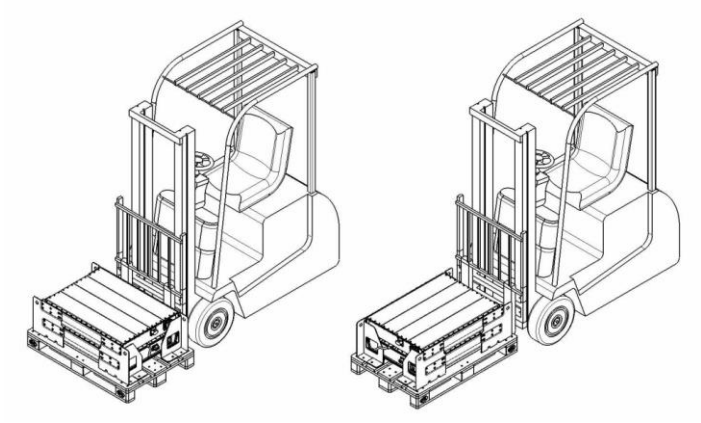

Figure 9: By using a pallet (EPAL), the CV Standard Battery may be lifted by a forklift

3.3.1 Allowed Pack Orientation

The standard mounting orientation of the CV Standard Battery is horizontal (as seen in Figure 10). Another option is the vertical mounting orientation shown in Figure 11. In this case, the coolant inlet and outlet connectors must be on the upper side of the CV Standard Battery.

	The CV Standard Battery shall not be mounted in vertical direction with plugs facing upwards (z-direction).

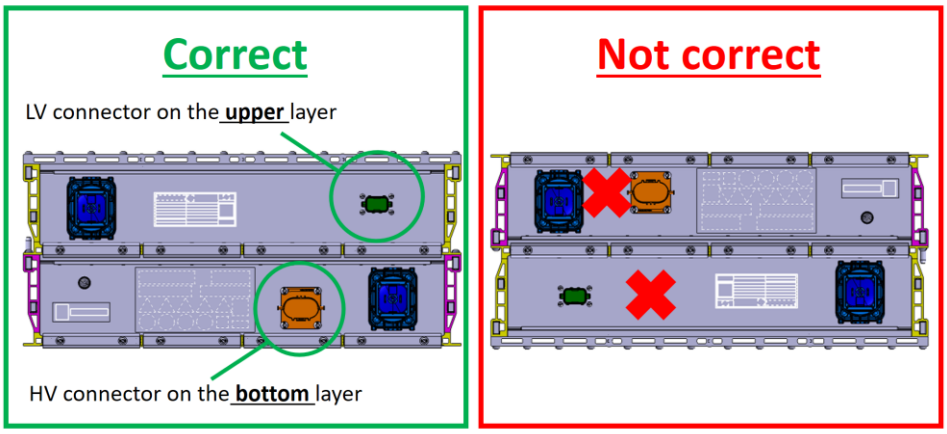

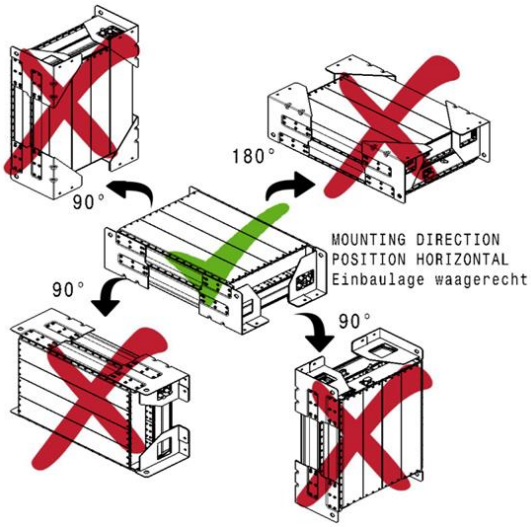

Figure 10: Mounting orientation

During handling of the CV Standard Battery pack, the pack shall be oriented according to the instructions in Figure 10.

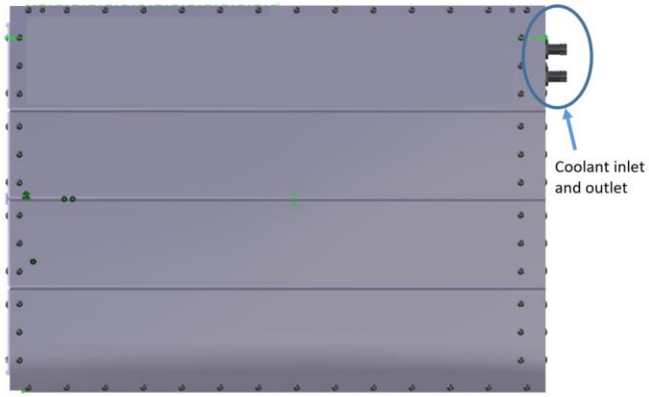

Figure 11: Vertical mounting orientation

	If the CV Standard Battery will be assembled in a non-horizontal orientation, the assembly has to be clarified and released by Webasto in advance of the installation.

3.3.2 Allowed Mounting Angle

The mounting angle of the CV Standard Battery must be within the range of ± 15° for all mounting orientations (Figure 12).

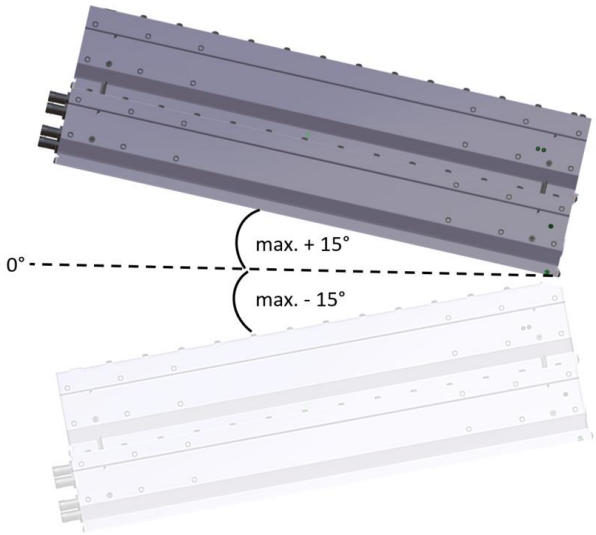

Figure 12: Allowed mounting angle - CV Standard Battery

3.3.3 Mounting distance between two CV Standard Batteries

If a mounting concept is desired in which a CV Standard Battery is mounted above another CV Standard Battery, a minimum distance of 10 mm between them must be ensured. This mounting case is shown in Figure 13.

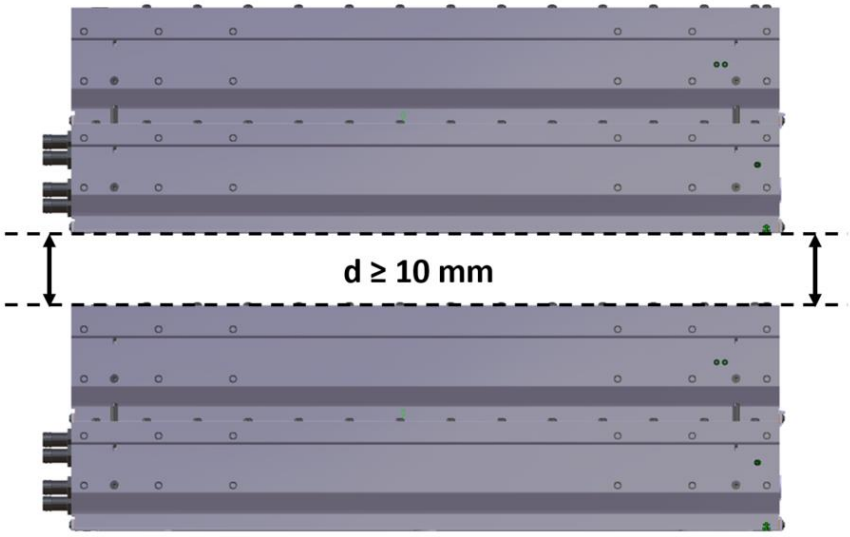

Figure 13: Minimum mounting distance between two above mounted CV Standard Battery packs

4 Thermal Specifications

4.1 General Temperature Specifications of the CV Standard Battery

The operating temperature range of the CV Standard Battery is **-30 °C to +60 °C**. If the measured temperature is out of range, contactors will open.

The CV Standard Battery should be stored between **+15 °C to +20 °C**.

The temperature safety limits of the CV Standard Battery (no operation) are **-40 °C** and **80 °C.**

4.2 Cooling System

4.2.1 Overview of Cooling System

Figure 14 shows the outline for the cooling system for each layer of the CV Standard Battery. It is a liquid cooling system. The cooling system consists of:

- a cooling plate with the modules placed on top of it
- a coolant distributor
- two hose connectors for coolant inlet and outlet

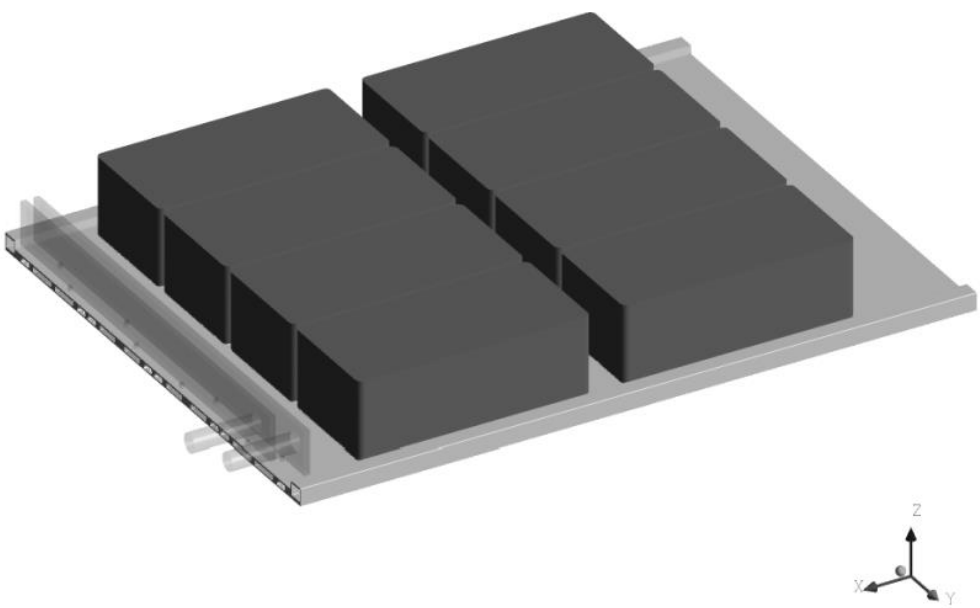

Figure 14: Overview of the CV Standard Battery cooling system

	Never externally heat the CV Standard Battery over 80 °C or put the battery into a fire!

	Do not remove or untighten any part of the cooling system. This may cause leakage and battery performance cannot be ensured anymore!

	If the CV Standard Battery will be assembled in a non-horizontal orientation, the assembly has to be clarified and released by Webasto in advance of the installation.

4.2.2 Cooling System Performances

The maximum cooling power of one CV Standard Battery is **1.3 kW**.

The minimum flow rate for the CV Standard Battery is **7,5 l/min** and the recommended flow rate is

10 l/min.

The total pressure drop of the cooling system is ≤ **50 mbar** at 10 l/min at 25 °C.

4.2.3 Cooling System Pressure Limits

The recommended operational coolant pressure is **2 bar.**

The operational coolant pressure shall be less than **3 bar**.

The maximum operational coolant pressure without causing leakage is **5 bar** for 0.5 s.

The damage pressure is **7 bar**.

4.2.4 Filling of Cooling System

Filling of cooling system of the CV Standard Battery shall be done only with connected cooling system.

	A vacuum filling of the cooling circuit is recommended.

	The customer must vent the cooling system before the vacuum filling of the cooling circuit.

Filling Steps

a. Prepare amount of coolant mixture with regards to CV Standard Battery coolant volume specified in chapter 4.2.5 and add additional coolant volume included in connected pipes and parts.

b. Fill the connected surge tank until maximum level is reached.

c. Turn on coolant pump with maximum flow rate to remove bubbles within the system.

d. Turn off coolant pump after no bubbles reach the tank anymore.

e. If coolant defined in a. is left over outside the coolant circuit repeat steps b. to d.

f. Level up surge tank to compensate ± 3.5% volume variation of complete system coolant volume with regards to 20°C

4.2.5 Coolant

For the CV Standard Battery, the coolant **BASF Glysantin G48** shall be used.

The amount of cooling fluid within the cooling system of the CV Standard Battery is **4.1 l**.

The mixture ratio of coolant and water shall be **50-50**.

4.2.6 Coolant Temperature

Normal operating range from +20 °C to +25 °C (no de-rating) and recommended point is +20 °C (no de-rating).

Detail information can be fined in the software parameter list.

4.2.7 Thermal Insulation

The maximum thermal convection of the CV Standard Battery shall be lower than **3 W/(m²K)**.

It is recommended to not have any forced airflow around the CV Standard Battery.

For detailed information, please contact Webasto.

4.2.8 General Overview of Connectors

The CV Standard Battery has **four (4) hose connectors** like shown in Figure 15. Two (2) of them are for the coolant inlet and the other two are for the coolant outlet.

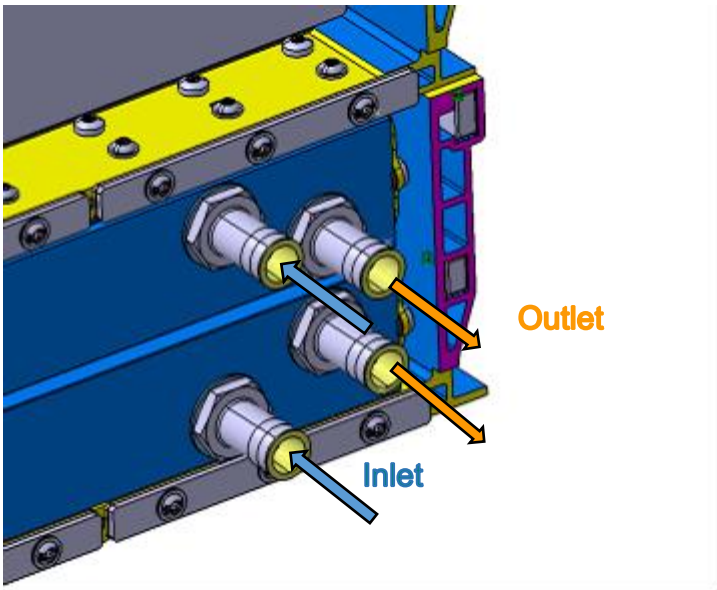

Figure 15: Connectors of the the CV Standard Battery

The two inlet hose connectors can be merged with a T-piece or Y-piece. The two outlet hose connectors can also be merged with a T-piece or Y-piece. In both cases, the Y-piece is recommended.

It is recommended that the external hose, which supplies the pack with coolant, can persist a pressure of **7 bars** or more.

4.2.9 Drawing of Connector

Figure 16 shows the drawing of the hose connector. The diameter of the hose pipe connector is 19 mm.

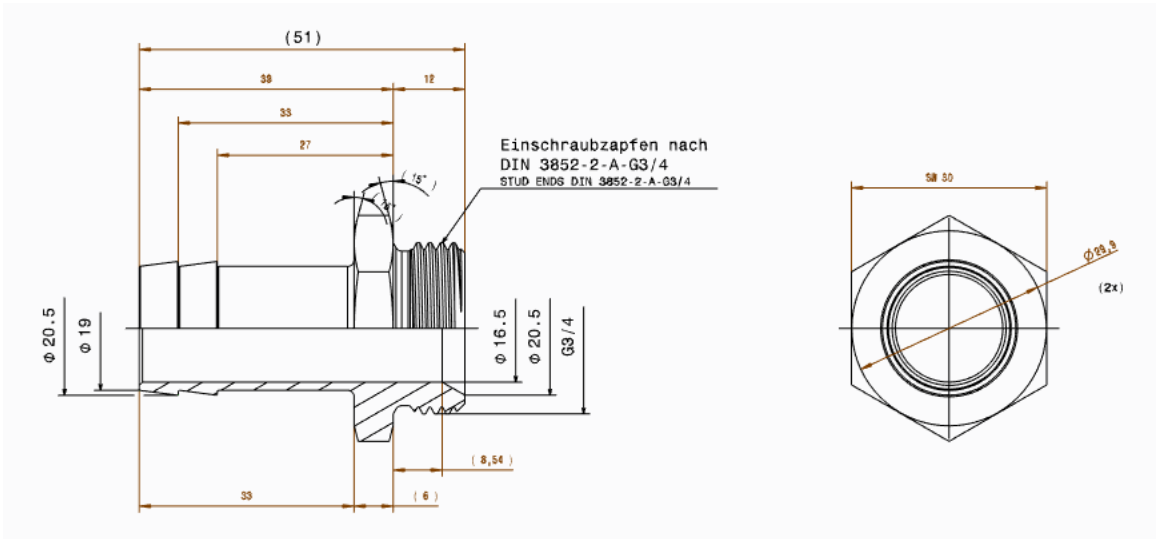

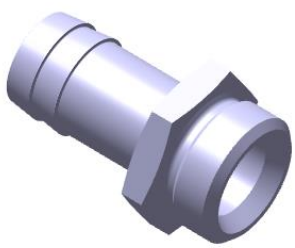

Figure 16: Drawing of the cooling system hose connector

4.3 Cooling System Integration

Figure 17 shows an example of a cooling system for the CV Standard Battery. This circuit can be extended to several batteries by increasing the number of valves with the number of batteries.

The pump shall always be positioned <u>in front</u> of the CV Standard Battery.

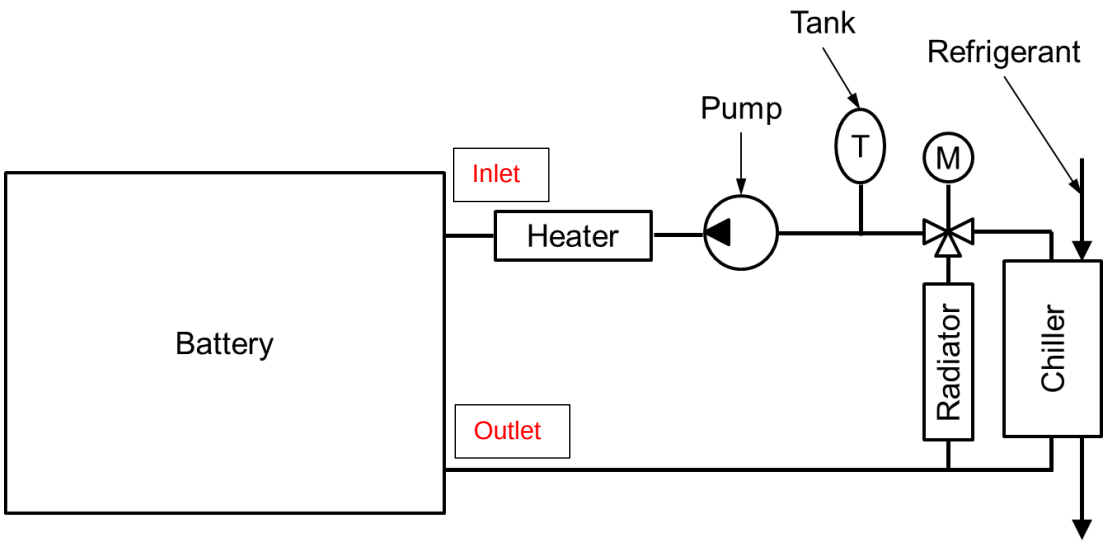

Figure 17: Example of cooling system integration circuit

4.4 Temperature CAN Signals

The CV Standard Battery delivers:

- an **activation signal** for the thermal management system
- a **signal for enable heating or cooling power**
- the **actual temperature**
- the **requested set point temperature**

More information regarding the CAN signals can be found in the attached arxml.-files.

5 Electrical Interfaces

The CV Standard Battery has two (2) electrical connectors: one low-voltage connector (LV) and one high-voltage connector (HV).

5.1 Overview of the Positions of the HV- and LV-Connectors

Figure 18 shows the position of the connectors.

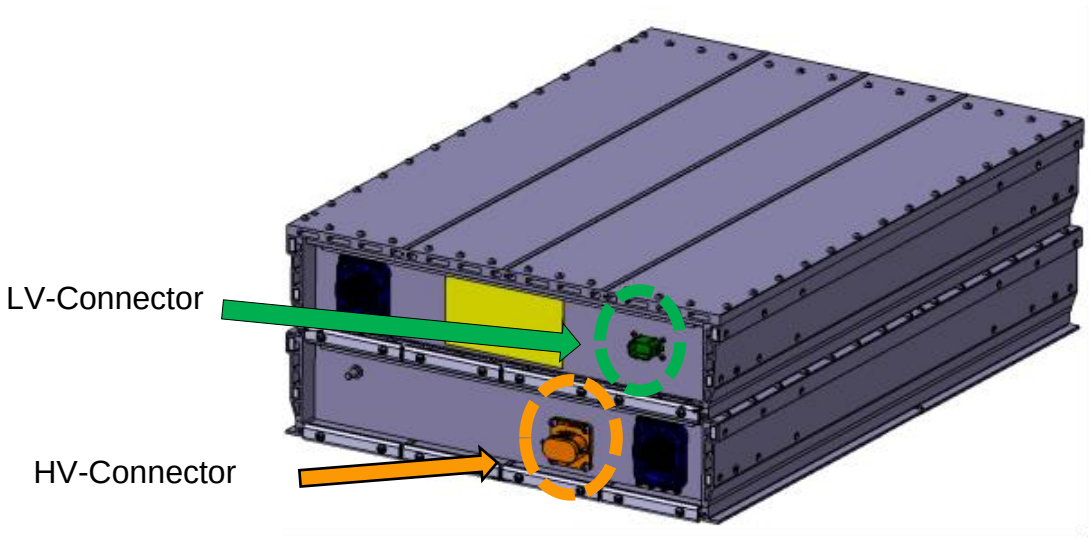

Figure 18: Overview of the position HV- and LV-Connector

5.2 Low Voltage Interfaces

5.2.1 CAN Communication of the CV Standard Battery

The BMC uses high-speed CAN communication in accordance with the norm ISO 11898-2.

For CAN communication with the vehicle, the extended CAN protocol is used.

The baud rate is 500 Kbps.

The CAN bus (CAN 0) does not have a termination on the battery side. If the CV Standard Battery is the last component on the CAN-bus, the CAN Bus must be terminated. The termination can be done either with an external 120 Ω resistor between the pins 8 and 9, or with an external bridge (direct connection with wire) between the pins 9 and 12 (vehicle side).

The description of the CAN communication is provided as an attachment to this document. The program “Vector AUTOSAR System Description Network Explorer” can be used to read the .arxml files.

5.2.2 Battery Side LV Connector

A 32-pin connector (coding A) from Amphenol (see Figure 19) is used to control and to receive the status of the CV Standard Battery. It enables the communication to the vehicle and handles the HV Interlock detection. The complete measurement/control system, in short BMS (Battery Management System) is supplied via the vehicle's LV battery (12 V+).

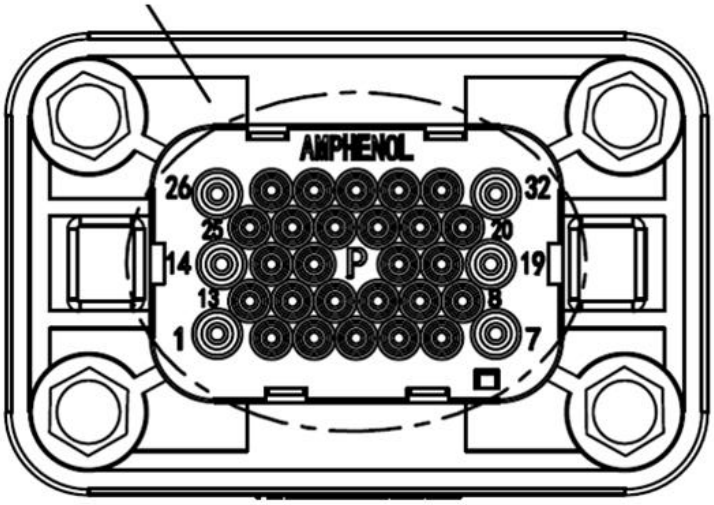

Figure 19: Drawing of the LV Connector X1 (HC08B-P32R)

Table 3 shows the pin assignment of the LV connector.

The pin assignment in

Table 3 is a preliminary plan and still under development. Webasto reserves the right to make changes.

Table 3: Pin layout LV connector

LV-Vehicle Connector X1

Amphenol HC08B-P32R

Cross Sections for Female Plug	Pin	Signal	Signal Description	
1.5 mm^2	1	CL30 SUP	Power supply (Cl.30)	
	2			
0.5 mm^2	3	ADR1	Addressing 1 *)	
0.5 mm^2	4	ADR2	Addressing 2 *)	
0.5 mm^2	5	CAN0 H	Vehicle CAN high in	Twisted pair
0.5 mm^2	6	CAN0 L	Vehicle CAN low in	
	7			
0.5 mm^2	8	CAN0 L	Vehicle CAN low out	Twisted pair
0.5 mm^2	9	CAN0 H	Vehicle CAN high out	
	10			
0.5 mm^2	11	WAKE UP 1	Ignition Cl.15	
0.5 mm^2	12	CAN0 L TERM	CAN0 Termination	
	13			
2.5 mm^2	14	GND CL31	Ground (Cl.31) / mass	
	15			
	16			
0.5 mm^2	17	CAN1 H	CAN1 high	Twisted pair
0.5 mm^2	18	CAN 1 L	CAN1 low	
	19			
0.5 mm^2	20	HVIL 0 In	HV interlock 0 in	
0.5 mm^2	21	HVIL 0 Out	HV interlock 0 out	
	22			
	23	Wake up 2	Not used	
	24			
	25			
2.5 mm^2	26	CL30C	Power supply (disconnected by vehicle if crash is detected)	
	27			
0.5 mm^2	28	ADR3	Addressing 3 *)	
0.5 mm^2	29	ADR4	Addressing 4 *)	
	30			

	31
	32

*) Numeration of pack ID, only used for multipack orientation

5.2.3 Vehicle Side LV Connector

To connect the vehicle/VIB to the CV Standard Battery, a 32-Pin female LV-Connector from Amphenol is required. The pin assignment should correspond to the pin assignment of LV-connector (battery side).

To assemble the connector, the following parts are needed:

Description	Part number	Quantity per CV
Connector female housing	HC18B-S32	1
Pin contact 0.5mm^2	SS20W1F	14
Pin contact 1.5mm^2	SS16M1F	1
Pin contact 2.5mm^2	MS14M23G10	2
Blind plug size 16	AC-CP000383	3
Blind plug size 20	AC-CP000382	12

The connector shall be proofed for at least IP67 / IP6K9K.

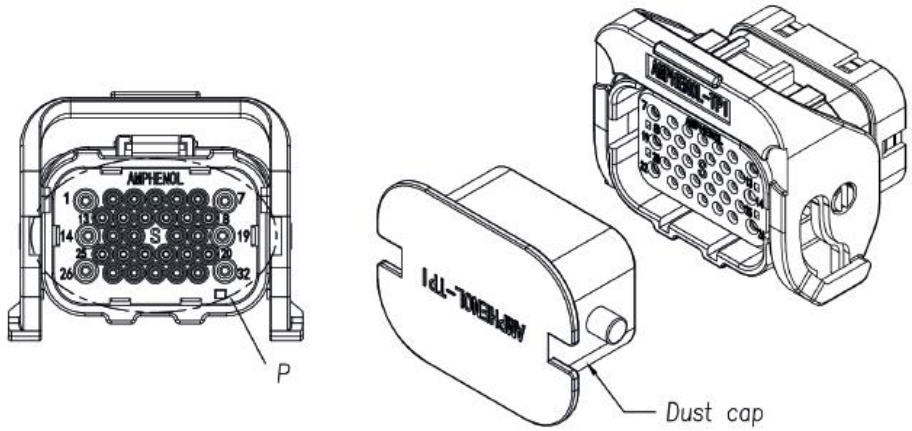

Figure 20: Overview LV-connector vehicle side (HC18B-S32)

	Protection against water ingress (IP67/IP6K9K) is given only if blind plugs and correct cable cross sections are used for the LV connector.

	The customer must protect the LV connector against effects of direct sunlight (UV, ultraviolet light). **Info: The UV protection needs to be considered for all plastic parts and cables as well.**

5.2.4 Further Information Regarding LV-Power Supply Specification

The HV-contactors are supplied via the pin 26 (“CL30C”). If the vehicle detects a crash, the vehicle should disconnect the CL30C power supply. The peak current of each contactor is ≤ 7 A. The power supply should support this range.

	The CV Standard Battery is not able to detect a crash by itself.

The “CL30_SUP” (pin 1) supplies the controller (BMC) and the sensors. The current should not exceed 0,5 A. The supply voltage must be kept within the limits of 10 V – 16 V. The recommended operating voltage is 12 V – 14 V.

Table 4 presents the current limits for the BMC in the CV Standard Battery pack, when the power supply is kept at 12 V. Fuses should protect the VICs/BMCs from higher current levels.

All cables must be protected against over-current and short circuits.

Table 4: Cross sections and current limits for the power supply pins, with a constant power supply of 12V

Cross Sections Cable	Pin	Signal	Signal Description	Continuous Current (@12.0V)	Peak Current (@12.0V)	Continuous Current (@16.0V)	Peak Current (@16.0V)
1.5 mm^2	1	CL30_SUP	Power supply (Cl.30)	≤ 300 mA	≤ 500 mA	not tested	not tested
0.5 mm^2	11	WAKE UP 1	Ignition Cl15	≤ 20 mA	≤ 50 mA		
2.5 mm^2	14	GND_CL31	Ground (Cl.31) / mass	≤ 1.8 A	≤ 10.6 A		
0.5 mm^2	23	WAKE UP 2	Wake up 2	≤ 20 mA	≤ 50mA		
2.5 mm^2	26	CL30C	Power supply (disconnected by vehicle if crash is detected)	≤ 1.5 A	≤ 10.0 A *)	≤ 1.5 A	≤ 13.0 A *)

*) for up to 500 ms

5.2.5 Addressing of the CV Standard Battery

In the case that a multipack application is desired, where two or more CV Standard Batteries are connected together (up to five parallel strings with two packs in series are possible), a Vehicle Interface Box (VIB) must be used to control up the multipack system. For more information about the VIB, take a look at the Quick Manual for the VIB. To distinguish between the signals from different battery packs, each CV Standard Battery Pack has an individual address defined by ADR1-4. Table 5 sums up the possible addresses that the VIB can read. The addressing pins of the LV connector are shown in Table 3.

Table 5: Addressing of the VIB and CV Standard Battery packs

ADR4	ADR3	ADR2	ADR1	BMS ECU Sub Type	BMS Pack ID	BMS Pack Name	VIC HV Topology
1	1	1	1	Standalone	0	Pack1_1	reserved
1	1	1	0	Slave	12	Pack2_6	2s6p
1	1	0	1	Slave	11	Pack2_5	2s5p
1	1	0	0	Slave	10	Pack2_4	2s4p
1	0	1	1	Slave	9	Pack2_3	2s3p
1	0	1	0	Slave	8	Pack2_2	2s2p
1	0	0	1	Slave	7	Pack2_1	2s1p
1	0	0	0	reserved	-	-	reserved
0	1	1	1	Bootloader (BL) entry	BL entry	BL entry	BL entry
0	1	1	0	Slave	5	Pack1_6	1s6p
0	1	0	1	Slave	4	Pack1_5	1s5p
0	1	0	0	Slave	3	Pack1_4	1s4p
0	0	1	1	Slave	2	Pack1_3	1s3p
0	0	1	0	Slave	1	Pack1_2	1s2p
0	0	0	1	Slave	0	Pack1_1	reserved
0	0	0	0	reserved	-	-	reserved
"1" means only default internal pullup resistor (no external wiring) "0" means external short to GND inside wiring harness/connector							

The individual CV Standard Battery pack names are defined as follows:

Pack**X_Y**

where

X = [1,2] and **Y** = [1-6]

The first number defines if a battery pack is “positive” (X=1) or “negative” (X=2).

A “positive” battery pack is defined as the pack, which is connected with its positive HV-cable to the VIB, while a “negative” battery pack has its negative HV-cable connected to the VIB.

The second number (Y = [1-6]) describes the parallel string and must starts with number 1!

An example for a BMS Pack Name for two different HV system topologies if given in Figure 21

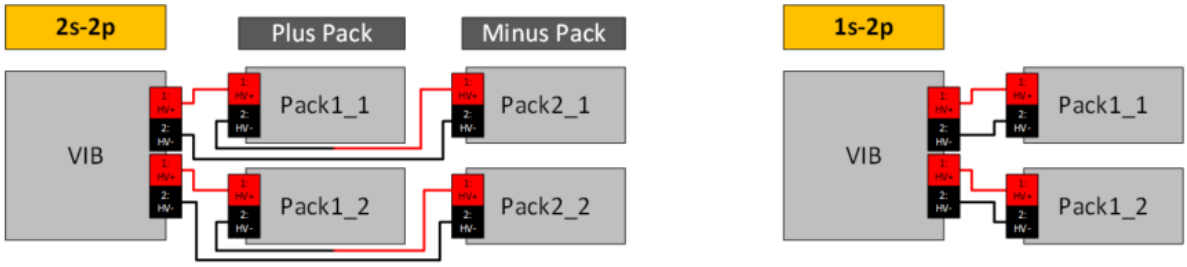

Figure 21: Example for a BMS Pack Name

	The parallel string number must start with Index 1.

	It is not allowed to use the same pack ID several times. In a multipack application, each CV Standard Battery pack must have its own individual ID.

	In the case of a multipack application, it is not allowed to skip a address ID.

As an example of a cable harness configuration for addressing of a CV Standard Battery pack, Table 6 shows the pinning of the Pack1_1, with the address (0,0,0,1) – (positive) battery pack #1.1. In this example, the three grounded pins are connected to ground by means of two splices.

Table 6: An example of the addressing pinning for the cable harness between a battery pack and VIB

LV-Vehicle Connector X1 Battery 1		
Amphenol HC08B-P32R		
Pin	Signal	Signal Description
1		
2		
3	ADR1	Addressing 1
4	ADR2	Addressing 2
5		
6		
7		
8		
9		
10		
11		
12		
13		
14	GND_CL31	Ground (Cl.31)/mass
15		
16		
17		
18		
19		
20		
21		
22		
23		
24		
25		
26		
27		
28	ADR3	Addressing 3
29	ADR4	Addressing 4
30		
31		
32		

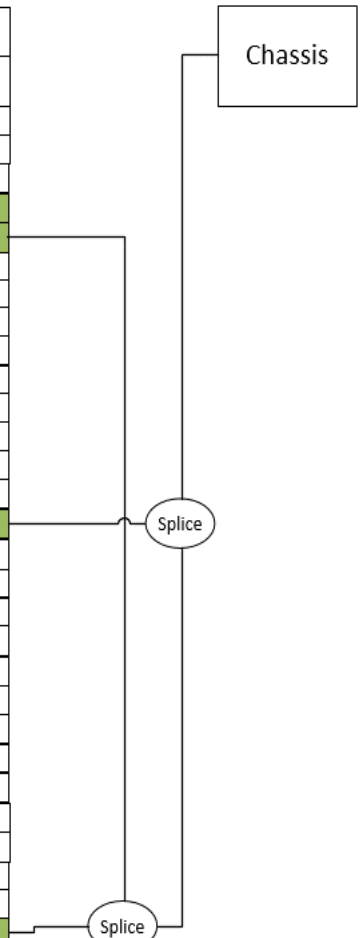

5.3 Service Disconnect Concept

In order to enable the customer to disable CV Standard Battery for service, the LV connection to the vehicle should be as follows:

1. An SD-switch or SD-plug, that can be secured against reconnection (e.g. with a padlock), must be integrated in the LV wiring harness on the vehicle side.
2. This switch or plug shall disconnect:
   I) The power supply of the contactors (CL 30C):
      - Pin 26 of the LV-connector (red line in Figure 22)
   II) The HVIL loop:
      - Pins 20 and 21 of the LV-Connector (blue line in Figure 22)

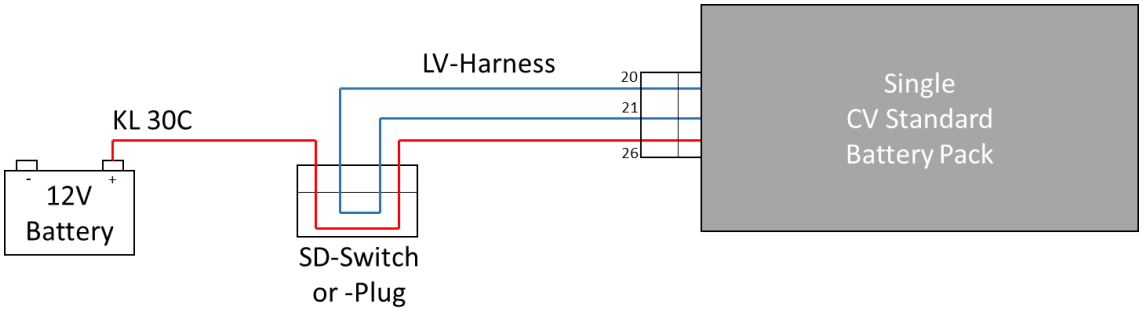

Figure 22: Connection scheme of the service disconnect concept

5.4 Recommended Emergency Stop Architecture

For usage in (vehicle) prototypes it is highly recommended to have an emergency stop switch for disabling the HV power in the reach of the operator.

The emergency stop switch shall disconnect the low voltage supply of the HV contactors (Clamp 30C; Pin 26).
Disabling the low voltage supply will force the HV contactors to open and therefore immediately cut the HV power.

The following diagrams are showing two examples for integration of the emergency stop switch into the low voltage system (see Figure 23).

<u>Variant A:</u>

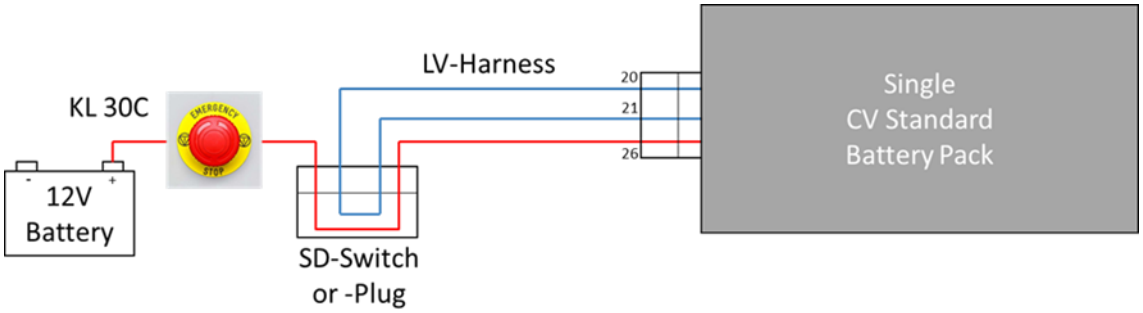

Variant B:

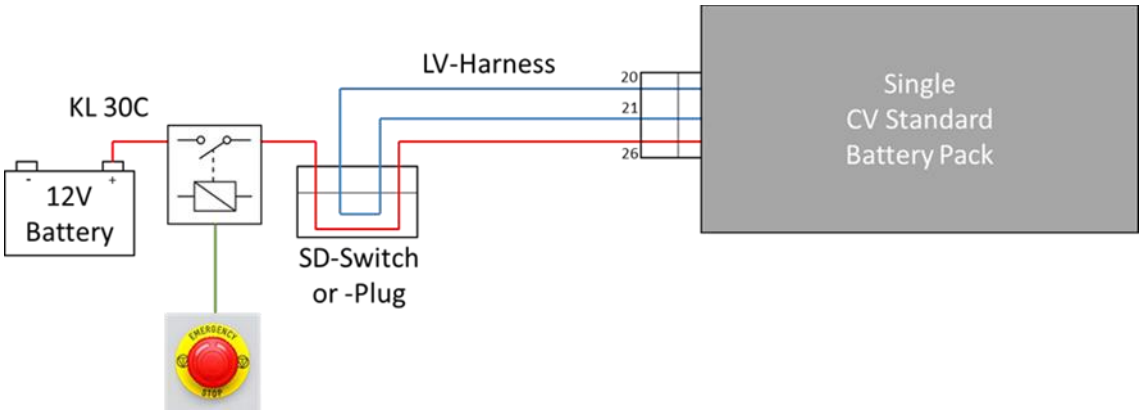

Figure 23: Connection scheme of the emergency stop concept

5.5 High Voltage Interfaces

	L/R time constant must be less than 1 ms with a maximum total inductivity of 40 µH at any output of the battery pack. Otherwise, short circuit protection cannot be assured. For detailed information, please contact Webasto.

5.5.1 Battery Side HV Connector

The CV Battery Pack is provided with a 4-pin HV connector (coding A, see Figure 24). The HV connector is applied to transfer the electric power from the CV Standard Battery to either the VIB (vehicle interface box), or directly to the vehicle. The HV interlock loop also passes through the HV connector.

	The customer must protect the HV connector against effects of direct sunlight (UV, ultraviolet light). **Info: The UV protection needs to be considered for all plastic parts and cables as well.**

Table 7 shows the pin assignment of the HV connector. Pin 1 and 2 transfer the electric power. Pin 3 and 4 are connected to the HV interlock loop, which is monitored by the BMS. The interlock pins (pin 3 and 4) will lose their connection before the main HV pins (1 & 2) lose their connection. As soon as the interlock pins detect an open circuit, the BMS recognizes an interlock error and interrupts the high voltage supply to all devices / loads.

The HV power socket will be supplied by Amphenol, with the following part number: **HVSL800 02 2A 1 H6**

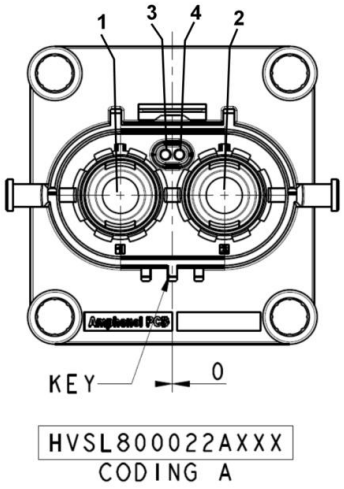

Figure 24: Pin layout HV connector

Table 7: Pin layout HV connector

Pin #	Signal name	Description
1	HV +	High voltage battery terminal (+)
2	HV -	High voltage battery terminal (-)
3 (A)	HVIL 1	HV interlock connection 1
4 (B)	HVIL 2	HV interlock connection 2

Figure 25: HVSL 800 connector from Amphenol (right angle plug)

5.5.2 Vehicle Side HV Connector

To connect the vehicle/VIB to the CV Standard Battery, an Amphenol HVSL800 2 pin connector assembly with the part number **HVSL 800 08 2A 1 35** (right angle with Keyway A) shall be used.

Connector number is derived from five major parameters. Table 8 shows how the Connector number was created. Bold marks are in connector that is used.

HVSL800 |_ _ (product type) |_ (position) |_ (coding) |_ _ (interlock) |_ _ (cable size)

Table 8: Creation of HV-Connector name

Parameters	Mark	Signification
Product type	06	Straight plug
	08	**Right angle plug**
Position	**2**	**2 positions**
	3	3 positions
Coding	**A**	**coding A**
	B	coding B
	C	coding C (only for 2 positions)
Interlock	0	without interlock
	1	**with interlock**
Cable size	25	25 mm² cable
	35	**35 mm² cable**
	50	50 mm² cable

The customer must protect the HV connector against effects of direct sunlight (UV, ultraviolet light).

Info: The UV protection needs to be considered for all plastic parts and cables as well.

5.6 Potential Equalization (PE)

The CV Standard Battery is equipped with:

- one potential equalization M10 grounding stud
- one nut

Figure 26 describes how to assemble the potential equalization cable on to the CV Standard Battery pack.

The maximum torque is 10 Nm with the tolerance from ± 10%.

In case of an electric failure, all components forming the potential equalization current path shall be able to carry the maximum possible current in a single-failure situation. Therefore, the cross section of the cable between the vehicle and the PE bolt shall be at least 25 mm². The PE cable shall be as short as possible. The resistance of the potential equalization path between the CV Standard Battery pack and vehicle shall not exceed 40 mΩ over the lifetime of the system.

To connect the PE cable, a 25 mm² M10 cable lug with the specification **CIMCO Article Nr. 18 0724** or equivalent cable lug is necessary.

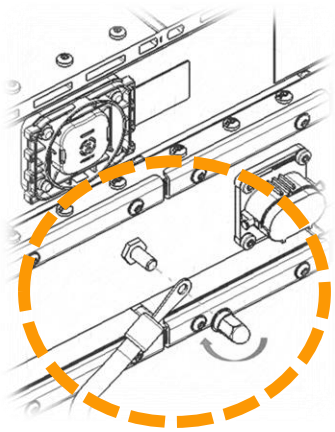

Figure 26: PE grounding stud with connected cable to vehicle chassis (ground)

6 Function Descriptions

The information in this chapter is based on the BMC B-sample (the electronics HW of the CV Standard Battery). The functions are implemented in the SW version BMS5.2.X

Refer to the attached arxml.-files for more detailed descriptions of the CAN-signals for the vehicle-CAN.

Danger:

The CV Standard Battery must be installed with special care under surveillance of trained experts only.

6.1 Communication between the CV Standard Battery and Vehicle

A CV Standard Battery can be used as a stand-alone battery pack system, or in a multipack configuration controlled by a Vehicle Interface Box (VIB).

This chapter describes the communication between a stand-alone CV Standard Battery pack and the vehicle.

If the CV Standard Battery is part of a multipack system, it will not communicate directly with the vehicle, but through the VIB. See the Quick Manual for the VIB for further information on a multipack system.

6.1.1 Arxml-Files for Description of the Vehicle-CAN-Signals

The communication between the CV Standard Battery and the vehicle is provided over the vehicle-CAN-bus. The detailed description for the CAN-signals can be found in the arxml.-files, which are provided as an attachment to this document.

6.1.2 End-to-End Protection (E2E)

If the customer cannot provide the BMS with E2E-protection, the BMS cannot operate.

The BMS is provided with E2E-protected CAN-communication, according to AUTOSAR standard profile 1C.

6.1.3 Initalization of BMC

The battery management system (BMS) will be started up by the Cl15 signal. After receiving the Cl15 signal, the battery management controller (BMC) will start the initialization process. To successfully activate the BMC, the CAN has to be activated.

When the initialization process of the BMC is successfully finished, the CAN-signal `BatSt` will send the information "*disconnected, awaiting HvReq*" over the vehicle CAN.

6.1.4 BMS Commands

After a successful initialization process, the BMS will await a command from the vehicle over the CAN-bus.

The CAN-signal `HvReq` is used to send commands to the battery pack. `HvReq` is sent over the CAN-message `CtlCmd`.

The `HvReq`-signal is used to change the state of the battery system, which is described in further detail in the next sub-chapter.

The description and signal-values for the `HvReq`-commands can be found in the arxml.-files attached to this document.

6.1.5 BMS Operational Modes

The BMS sends the state of the CV Standard Battery to the vehicle over the CAN-signal `BatSt`. `BatSt` is sent over the CAN-message `BatInfo`.

The description and values for the `BatSt`-signals can be found in the arxml.-files attached to this document.

Figure 27 illustrates the CAN-communication between vehicle and the CV Standard Battery pack when a stand-alone CV Standard Battery is being connected and disconnected for driving.

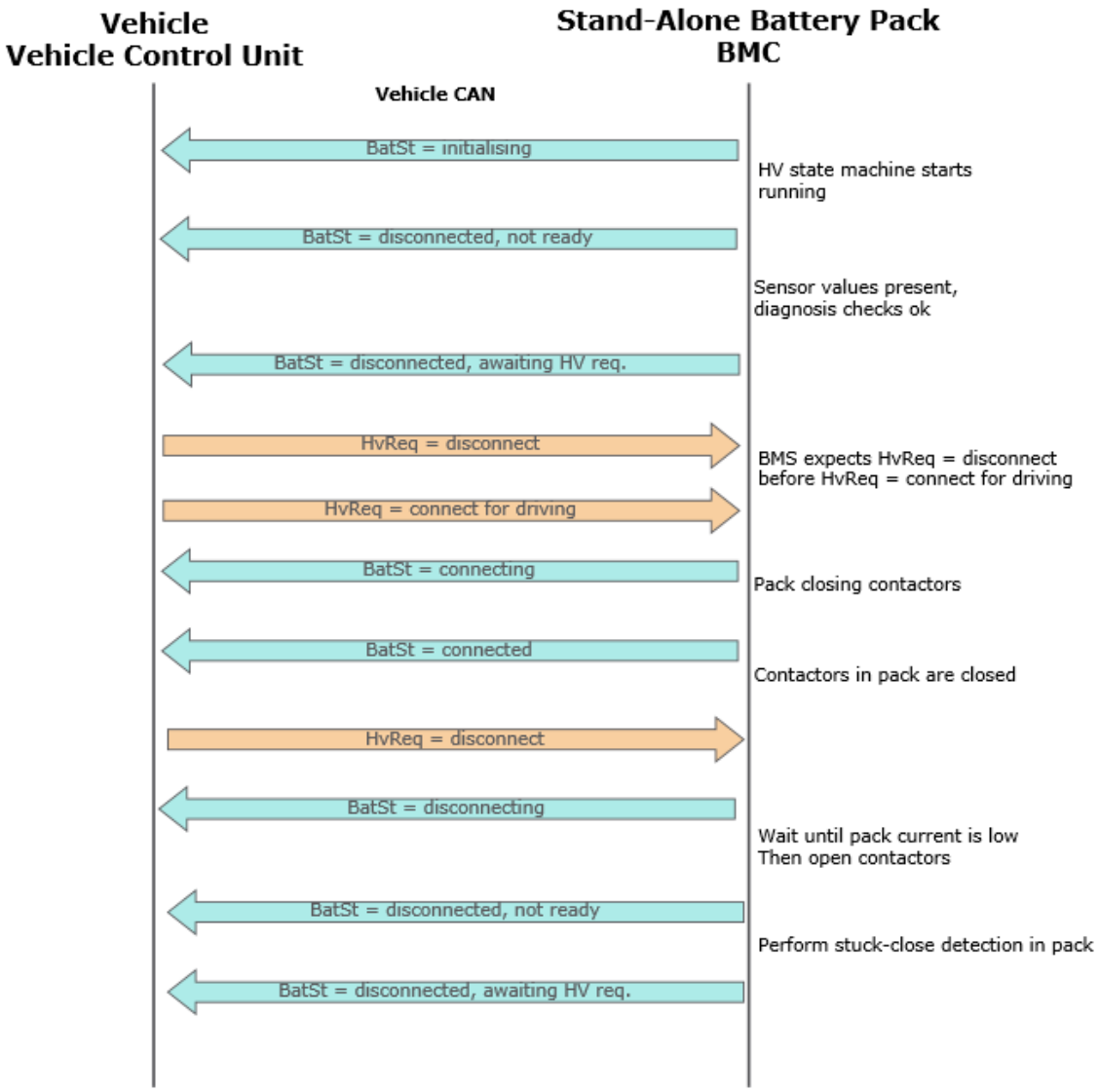

Figure 27: CAN-communication between vehicle and a stand-alone CV Standard Battery for connection/disconnecting the pack for driving

6.1.6 Required Vehicle-CAN-Signal Inputs

To make a stand-alone CV Standard Battery pack operate correctly, the BMS requires information from the vehicle and the thermal management system. The information shall be sent from the ECU of the vehicle or the thermal management system over the vehicle CAN. The CAN-signals that the BMS shall receive over the vehicle-CAN are presented in Table 9.

See the Quick Manual for the VIB for further information on the required CAN-signals if the battery pack is part of a multipack system.

CAN-signals marked with “currently not used” in Table 9 are planned for future development, and are not needed for the BMS to operate correctly.

For the SW-version BMS2.x., the client does not have to provide the BMS with the CAN-signals marked with “currently not used” in Table 9.

Table 9: CAN-signals that the BMS shall receive over the vehicle-CAN

Sender ECU	CAN Message	CAN signal	Signal Description	Expected values
Thermal Management System ECU	ThermSysInfo	CoolgHeatgCfmd	The value of this signal shall be the fraction P_available / P_required, where: P_available is the power presently used for heating/cooling of the battery system; P_required is the power that would presently be needed for cooling/heating.	Currently not used
Vehicle Control Unit	VehTi	Year	This signal contains the year of the vehicle time (in time zone UTC+0).	Currently not used
		Month	This signal contais the month (within the given year) of the vehicle time (in time zone UTC+0).	Currently not used
		Day	This signal contais the day (within the given month) of the vehicle time (in time zone UTC+0).	Currently not used
		Hour	This signal contais the hour (within the given day) of the vehicle time (in time zone UTC+0).	Currently not used
		Minu	This signal contains the minute (within the given hour) of the vehicle time (in time zone UTC+0).	Currently not used
		Sec	This signal contains the second (within the given minute) of the vehicle time (in time zone UTC+0).	Currently not used
	VehInfo	VehInfo_Cks	CheckSum signal for message VehInfo	See chapter: 6.1.3 End-to-End Protection (E2E)

		VehInfo_DIDNibble	DIDNibble signal for message VehInfo	See chapter: 6.1.3 End-to-End Protection (E2E)
		TAmb	This signal contains the ambient temperature of the vehicle.	Currently not used
		VehSpd	This signal contains the present vehicle speed.	Factor: 0.5 Unit: km/h
		VehInfo_Alvctr	Alive counter signal for message VehInfo	See chapter: 6.1.3 End-to-End Protection (E2E)

Sender ECU	CAN Message	CAN signal	Signal Description	Excpected values
Vehicle Control Unit	CtlCmd	CtlCmd_Cks	CheckSum signal for message CtlCmd	See chapter: 6.1.3 End-to-End Protection (E2E)
		CtlCmd_DIDNibble	DIDNibble signal for message CtlCmd	See chapter: 6.1.3 End-to-End Protection (E2E)
		HvReq	This signal contains the high voltage request sent to the multipack or to the stand-alone battery system	255: info not available (default) 32: connect for AC charging 16: connect for driving 1: emergency diconnect 0: disconnect
		IsInMeastDisaCmd	This signal can be used to deactivate or activate the isolation measurement of the multipack or the stand-alone battery system	3: info not available (default) 2: reserved 1: deactivated 0: activate
		CtlCmd_Alvctr	Alive Counter signal for message CtlCmd	See chapter: 6.1.3 End-to-End Protection (E2E)
	SftyInfo	SftyInfo_Cks	CheckSum signal for message SftyInfo	See chapter: 6.1.3 End-to-End Protection (E2E)
		SftyInfo_DIDNibble	DIDNibble signal for message SftyInfo	See chapter: 6.1.3 End-to-End Protection (E2E)
		SftyOk	This signal informs the stand-alone battery pack or the multipack system about the status of the safety diagnostics	3: Signal not available or invalid 2: reserved 1: safety OK 0: safety not OK
		CrashDetnNeg	This signals informs the multipack or the stand-alone battery whether the result of the crash detection of the vehicle is negative.	3: info not available (default) 2: reserved 1: no crash detected 0: crash detected
		SftyInfo_Alvctr	Alive Counter signal for message SftyInfo	See chapter: 6.1.3 End-to-End Protection (E2E)

6.2 Start-Up Criteria of Battery System

Before closing the contactors of the CV Standard Battery, make sure that no power consuming components are connected to the power line. This will generate an error, and the BMS will not close the contactors in the battery pack.

Reversely, before disconnecting the contactors of the CV Standard Battery, all power consuming components shall be disconnected from the power line first.

The customer must ensure that no HV power consumers are switched on until the contactors in the battery pack are properly closed after pre-charge. The BMS sends the signal `BatSt` on the vehicle CAN when the system is ready to drive. After that the consumers can start to draw current from the power line.

6.3 Shut-Down Sequence

The CAN-signal `HvReq` is used to command the BMS to switch off the HV contactors in the CV Standard Battery.

Before shutdown, all power consumers that are supplied by the battery system shall be disconnected before the pack opens its contactors.

If the CL15 signal is turned off, the BMS will shut down. To avoid that the BMC is woken up again over CAN, the CAN has to be deactivated. Otherwise, the BMC will wake up cyclically.

6.4 Contactor Control

The CV Standard Battery is not able to detect a crash by itself, but can react on a crash signal (Cl30C or CAN-message) provided by the vehicle.

The contactors are supplied by TERMINAL_CL30c, which is the hardware crash signal. If the vehicle detects a crash event, the TERMINAL_CL30c will be switched off. Consequently, the contactors will lose their power supply, and disconnect the HV supply.

If the vehicle detects a crash event, it shall communicate the crash detection to the BMS by means of the vehicle-CAN-signal `CrashDetnNeg`. See Table 10 and the attached arxml.-file for further information about the signal values of `CrashDetnNeg`.

6.5 Pre-Charge

The CV Standard Battery is provided with a pre-charge function, which is dimensioned to pre-charge the DC-link between the battery and the electrical motor in the vehicle with up to 1,5 mF during a charging time smaller than 1 s. In the pre-charge sequence, the negative contactor closes first, thereafter the pre-charge contactor (see numbering of the sequence in Figure 28).

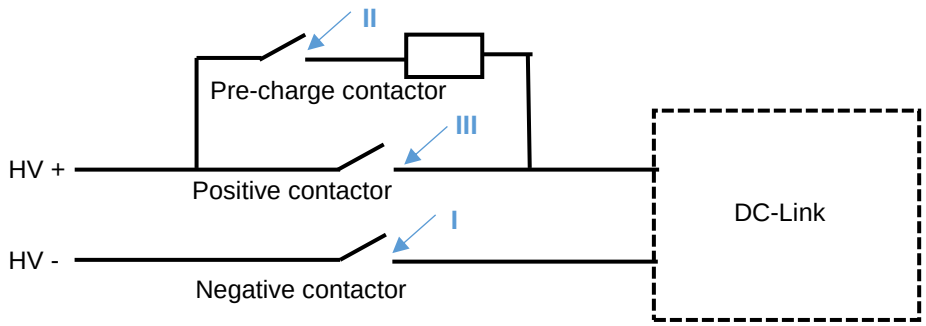

Figure 28: Pre-charge sequence for the DC-link betweeen the vehicle and the CV Standard Battery

6.5.1 Pre-Charge End Condition

The precharging is finished if the following two end conditions are fulfilled:

- The relative voltage tolerance is set to 95 %, which defines the DC-link voltage tolerance in relation to the total battery voltage.
- The absolute voltage tolerance is set to 10 V, which defines the tolerated difference between battery and DC-link voltage.

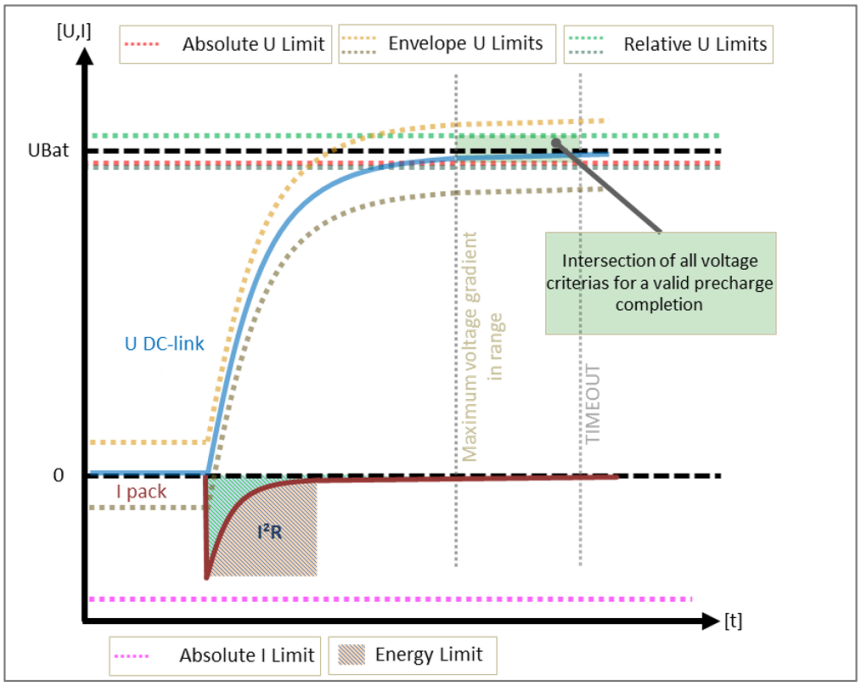

Figure 29: The pre-charge is ended when the voltage of the DC link reaches a level within the intersection of all end condition criteria, marked with a green field in the U/I-t-curve in this figure

6.5.2 Pre-Charge Energy Monitoring

The pre-charged energy is determined during each pre-charge operation. If the value exceeds the threshold defined to 723 Ws, an error flag is set, and the contactors will open.

6.6 Error Signals of BMS

The error level of the BMS is transmitted via the CAN-signal `ErrLvl`. `ErrLvl` is sent over the CAN-message `BatSts`. See the attached arxml.-files for more information about the content of the CAN-signal.

Table 10 presents the CAN-signals that provide the error status of the multipack system functions. See the attached arxml.-files for more information about the content of the CAN-signals.

It is possible that some functions are not completely implemented in the current BMS Software Version.

Table 10: Overview of the CAN-signals that provide the error status of the BMS

Signal	Function
`CellTPermsnToCls`	Cell temperature safety function
`CellUPermsnToCls`	Cell voltage safety function
`CptTPermsnToCls`	Component temperature safety function
`CrashPermsnToCls`	Crash safety function
`CtctrStuckClsdPermsnToCls`	Contactor Stuck Closed safety function
`LockMemPermsnToCls`	Lock memory monitoring
`DcChCtctrStuckPermsnToCls`	DC contactor monitoring safety function
`HvilPermsnToCls`	HVIL safety function
`IsInPermsnToCls`	Isolation monitoring safety function
`MpsIPermsnToCls`	Multipack current monitoring safety function
`PackIPermsnToCls`	Pack current monitoring safety function
`ThermRunAwPermsnToCls`	Thermal runaway safety function

6.7 Interlock

The BMS is operating an interlock mechanism as shown in Figure 30.

The internal interlock loop controls that the LV and HV connectors are properly connected to the CV Standard Battery.

A signal line with a PWM signal is driven and evaluated by a watchdog timer. If an interlock error is detected, and the vehicle speed is below 5 km/h, the BMS opens the main contactors of the CV Standard Battery. The BMS also prevents the contactors from closing again.

If the BMS does not receive the vehicle speed from the ECU of the vehicle (vehicle-CAN-signal `VehSpd`), the BMS will assume a vehicle speed of 0 km/h.

	If the BMS does not receive the vehicle speed from the ECU of the vehicle (vehicle-CAN-signal VehSpd), the BMS will assume a vehicle speed of 0 km/h.

The interlock PWM signal is generated by the ECU of the CV Standard Battery Packs. Therefore no second PWM signal source shall be integrated within its HV-interlock loop.

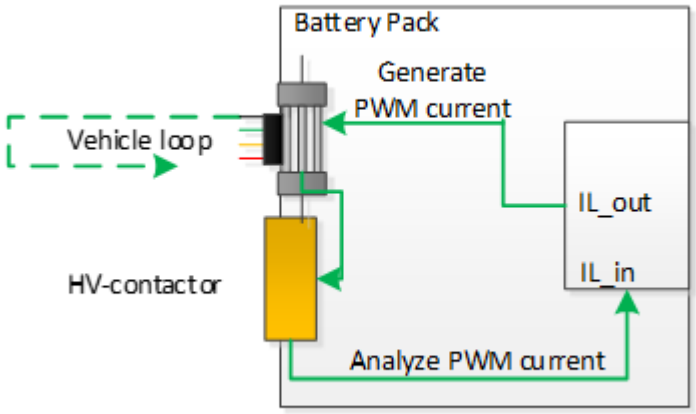

Figure 30: Interlock configuration. The HV interlock loop can be closed by an external bridge between pin 20 and 21 on the LV-connector

6.8 Insulation Measurement

	The CV Standard Battery must always have an activated isolation measurement. **The isolation measurement in the BMS shall not be deactivated, unless the vehicle provides its own isolation measurement which is activated.**

The BMS will execute the isolation measurement for the stand-alone CV Standard Battery pack and the vehicle as long as the battery pack is connected to the HV string.

In case that the vehicle has its own isolation measurement device, the isolation monitoring function in the BMS shall be deactivated. The isolation monitoring in the BMS can be activated and deactivated by using the CAN-signal `IsInMeastDisaCmd`.

The insulation detection calculates the insulation resistance between the vehicle chassis and the high voltage connection of the CV Standard Battery. The insulation resistance calculation is based on a

passive measurement, and Figure 31 shows the main layout of the measurement. For further details about the measurement procedure, see Annex 4B in ECE- R100.

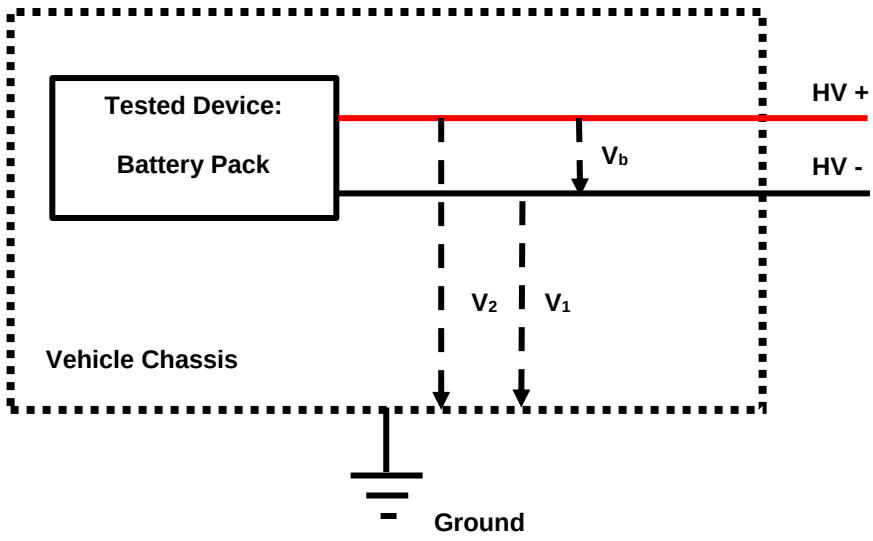

Figure 31: Insulation measurement concept

The calculated isolation resistance shall have a value higher than a threshold value, which ensures an isolation resistance higher than 500 Ω/V during driving (see the Quick Manual attachment "*Parameter Software"* for the implemented threshold values).

If an isolation resistance smaller than the given threshold is detected during driving, the BMS sets a warning. When the contactors open after driving, the BMS sets an error.

The BMS will also send a warning if the isolation resistance is lower than a defined warning threshold, but still higher than the threshold value for opening of the contactors.

The current isolation resistance can be read from the CAN-signal `RIsIn`.

6.9 Charging

Charging is commanded by the vehicle over the CAN-signal `HvReq`. The BMS does not communicate with the charger.

6.10 Thermal Management

6.10.1 General Thermal Management Information

If the cell temperature exceeds 55 °C, the BMS opens the main contactors.

The BMS delivers the temperature signals in °C.

6.10.2 Communication with Thermal Management System

The CV Standard Battery can be connected to an external thermal management system. The BMS supports communication with two variants of thermal management systems, by means of the two CAN-messages `BatThermReq1` and `BatThermReq2`.

Cooling and/or heating is requested by the BMS. The vehicle controls whether the thermal management system shall be turned on or not. After initialization of the thermal management system, its ECU communicates directly with the BMS.

The thermal managment system must be provided by the OEM.

6.10.3 BatThermReq1

The CAN-message `BatThermReq1` contains the CAN-signals listed in Table 11.

The actual and set point temperature are provided, so that the thermal management can control the coolant flow optimally.

The CAN-message `BatThermReq1` is only suitable for thermal management systems that use a control algorithm based on actual and set point temperatures.

Table 11: CAN-signals in the message BatThermReq1

CAN-signal	Signal description
ThermSysStrtReq1	Requests the vehicle to turn on the ECU of the thermal management system.
PackNameThermReq1	<u>Only used in multipack systems/VIB:</u> This signal sends the IDs of the battery pack in a multipack system. Hence, the thermal management system can react differently for the different battery packs in the multipack system.
EnaCoolgHeatgBatFlag	This signal indicates whether cooling/heating shall be activated for the battery pack with name PackNameThermReq1. For a stand-alone battery pack, this signal indicates that the cooling/heating shall be activated.
TAct	This signal contains the actual temperature of the battery pack with name PackNameThermReq1.
TSetPoint	This signal is the set point temperature for the cooling/heating control of the thermal management system.

6.10.4 BatThermReq2

The CAN-message `BatThermReq2` contains the CAN-signals listed in Table 12. With these signals, the BMS can request the thermal management system to turn on or off the coolant flow.

The CAN-message `BatThermReq2` is only suitable for thermal management systems that merely activate/de-active the coolant flow (with fixed temperature) based on a flag.

Table 12: CAN-signals in the message BatThermReq2

CAN-signal	Signal description
ThermSysStrtReq2	Requests the vehicle to turn on the ECU of the thermal management system
CoolgHeatgReq	This signal indicates whether the coolant flow shall be activated by the thermal management system or not.

6.11 State of Charge (SoC)

The CV Standard Battery is provided with a state of charge (SoC) function. In case of over-charge and over-discharge, the BMS will open the connectors.

The SoC is sent with the CAN-signal `Soc` over the CAN-message `BatSox` over the vehicle-CAN.

The BMS delivers the SoC in percentage (%).

6.12 State of Health (SoH)

The CV Standard Battery is provided with a state of health (SoH) function.

The SoH is sent with the CAN-signal `Soh` over the CAN-message `BatSox` over the vehicle-CAN.

The BMC delivers the SoH in percentage (%).

6.13 Voltage Limits

The maximum voltage that the CV Standard Battery can withstand without damages is 405 V. Therefore, the CV Standard Battery must not be used in systems where voltages exceeding 405 V may occur.

6.13.1 Cut off Voltages for the Battery Cells

If the cut off limits for over and under voltage for the cells are violated, the BMS opens the main contactors.

6.13.2 Cut off Voltages for the Battery Pack

If the cut off limits for over and under voltage for the battery pack are violated, the BMS opens the main contactors.

6.14 Current Limits

Charge and discharge current limits will be sent from the battery to the vehicle via CAN. If the vehicle does not operate within the specified limits, the battery will open the contactors.

6.15 Diagnostics

For information about the DTCs that are provided for the BMS, please see the attached document "*BMS_CDD.xlsx*".

7 Rescue Service Instructions

7.1 General warnings

	<u>DANGER!</u> **Maximum operating voltage of the electric drive system is 405V or 810V (depending on used system).** **Danger of electric shock.** **Lithium-Ion batteries are used!**

	<u>DANGER!</u> **Never cut, breach, or touch orange high voltage cables.** **Never cut, squeeze or open the CV Standard Battery pack.** **Ignoring warnings can lead to life threatening injuries or death.**

	<u>WARNING</u>: **Even after deactivation of clamp 15 (Ignition) the HV system still can be powered. Additional deactivation method (see chapter 7.4) shall be performed to ensure deactivation of the HV system.**

	<u>WARNING:</u> **The electrolyte amount within the CV Standard Battery (16 Modules) is about 25 l. The electrolyte is flammable. For detailed information, please contact Webasto.**

7.2 General information

7.2.1 Identification of HV components:

Battery label:

High voltage warning label:

High voltage cables:

- Orange colored cables

7.2.2 Emergency scenarios

In case of fire:

Battery electrolyte and vented gases are flammable. Use high amount of water for cooling the battery. Use ABC dry chemical fire extinguisher only for secondary fires not related to the battery itself.

	<u>WARNING:</u> **Even if the fire is extinguished, the CV Standard Battery is capable to ignite again.**

7.3 Vehicle Immobilization

The vehicle manufacturer shall provide information how to secure the vehicle against undesired movement.

7.4 Deactivation of drive and high voltage system

The vehicle manufacturer shall provide information how to deactivate drive and HV system.

The following procedures can be used to deactivate drive and HV system in addition to vehicle shut down:

- Using the service disconnect (see chapter: 5.2.5)
- Using the emergency stop (if implemented, see chapter 5.4)
- Cutting 12V / 24V supply (clamp 30C) and / or HVIL line
  The line to cut should be marked with e.g. the following label:

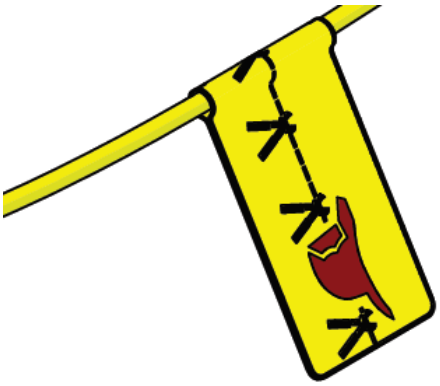

- Removing fuses for 12V / 24V power supply (clamp 30C)
- Disconnecting 12V / 24V battery from the vehicle electrical system

8 Service and Decommissioning CV Standard Battery

8.1 General warnings for service and decommissioning

DANGER!

High voltage within the CV Standard Battery cannot be switched off.

The CV Standard Battery contains parts with high voltage potential which can be touched when opening the battery housing. Any repair, maintenance and decommissioning actions must be done by trained and approved personal only!

WARNING:

Even after deactivation of clamp 15 (Ignition) the HV system still can be powered. Service Disconnect procedure must be followed in advance to any service or maintenance actions.

8.2 Service instructions and service plan

The CV Standard Battery is designed that no maintenance is required over specified lifetime. In case, repair on the battery system is needed within the lifetime, only trained and approved personal is allowed to open the battery pack and execute any procedures. It is highly recommended to align necessary working steps with Webasto.

8.3 Decommissioning of battery pack

Battery packs at the end of life shall be returned to Webasto for decommissioning and recycling. For transport to Webasto the regional legal requirements must be considered.